ZY6D SYSTEM BLOCK DIAGRAM

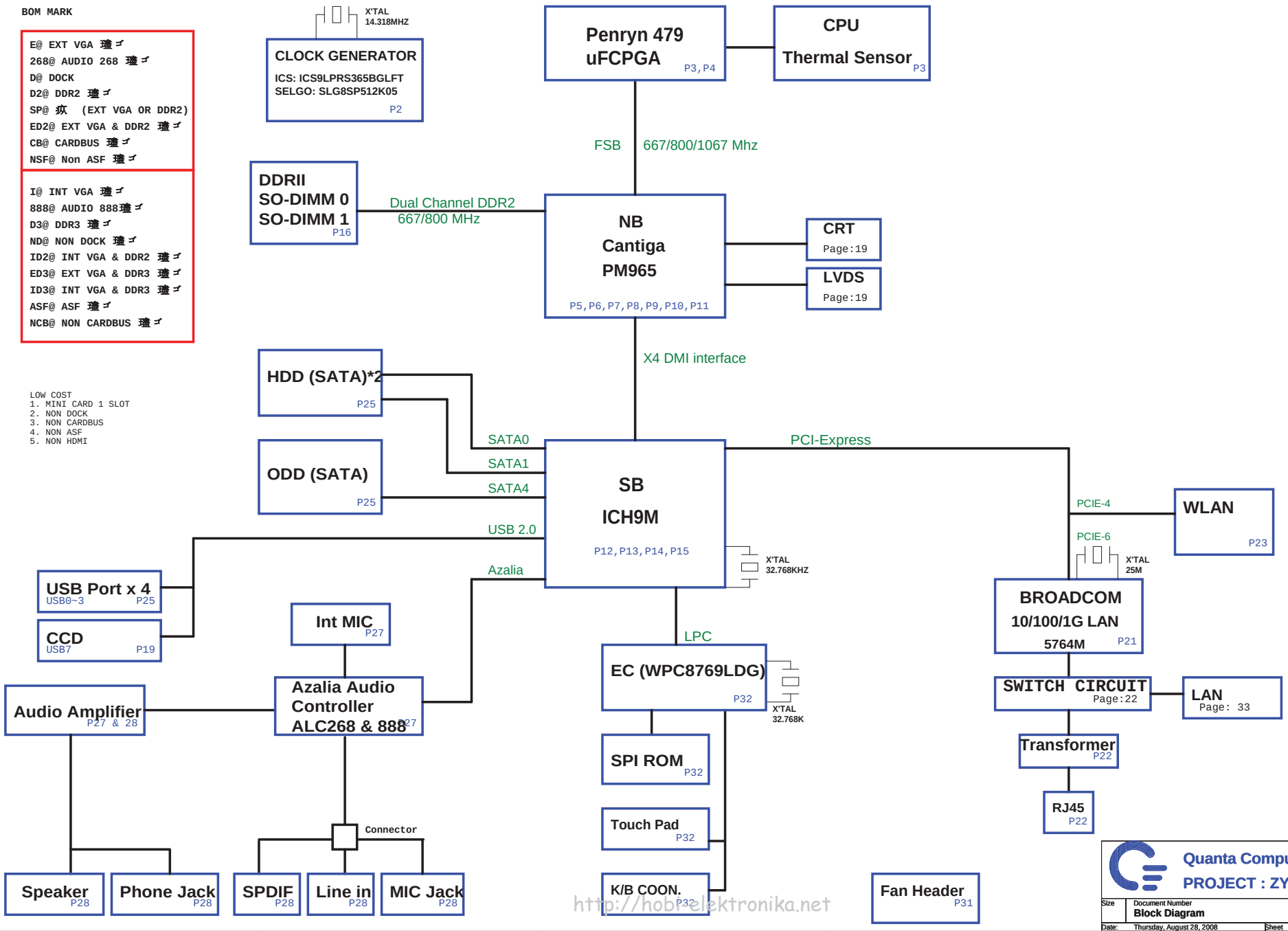

http://hobbyelektronika.net

PDF created with FinePrint pdfFactory Pro trial version http://www.fineprint.com

Clock Generator

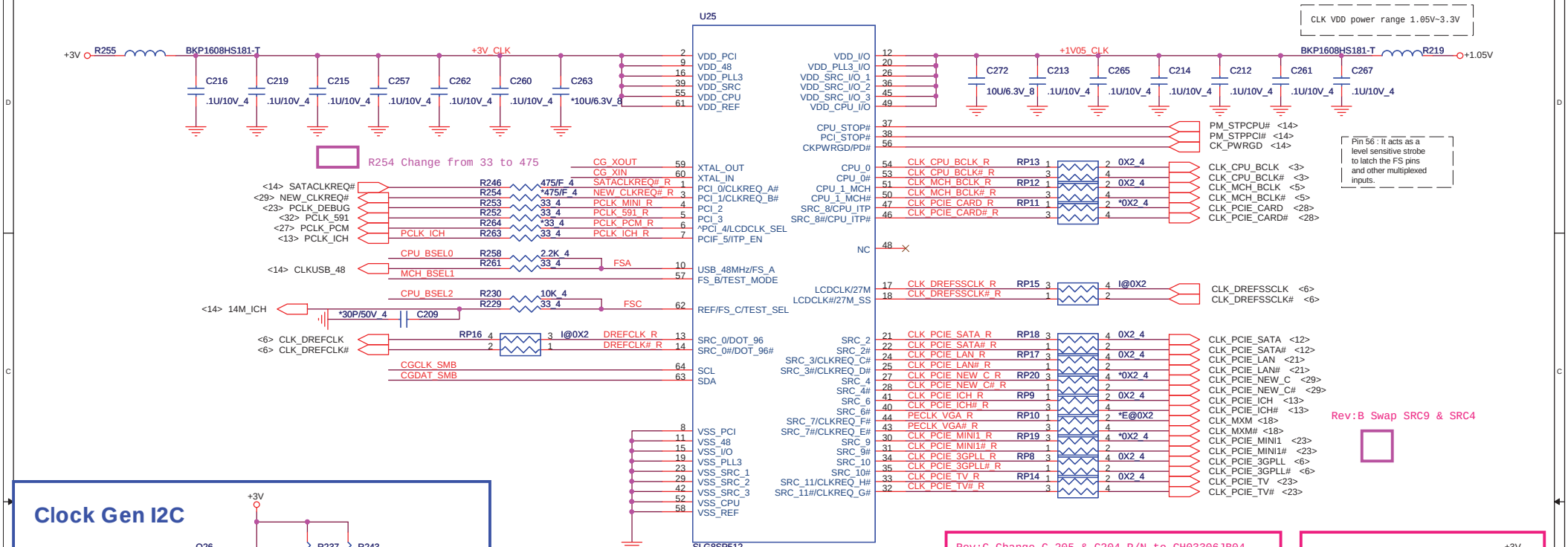

Clock Gen I2C

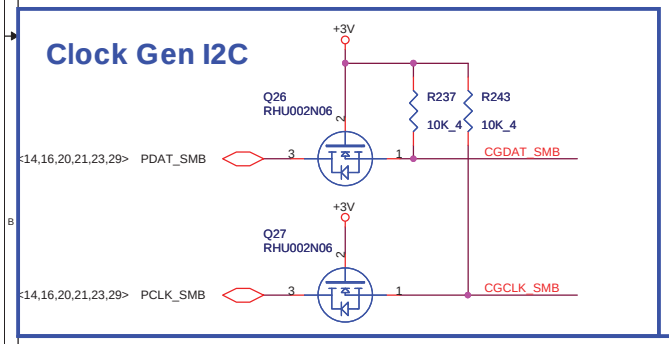

	QCI P/N
SLG8SP512	AL8SP512K05
ICS9LPRS365BGLFT	ALPRS365K13

CPU Clock select

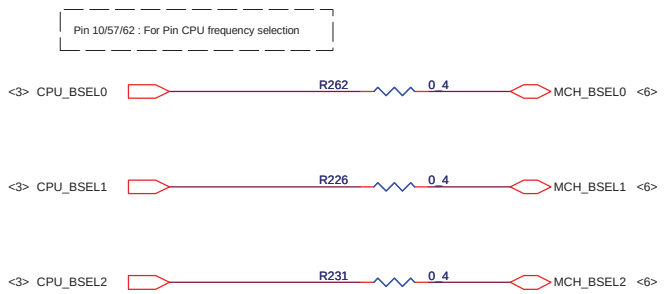

BSEL Frequency Select Table

FSC	FSB	FSA	Frequency
0	0	0	266Mhz
0	0	1	133Mhz
0	1	1	166Mhz
0	1	0	200Mhz
1	1	0	400Mhz
1	1	1	Reserved
1	0	1	100Mhz
1	0	0	333Mhz

Strap table

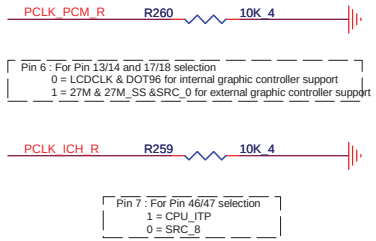

Quanta Computer Inc.

PROJECT : ZY2 & ZY6

Size	Document Number	Rev
	CLOCK GENERATOR CK505 W/REGULATOR	1A

Date: Thursday, August 28, 2008 Sheet 2 of 40

http://hobi-elektronika.net

PDF created with FinePrint pdfFactory Pro trial version http://www.fineprint.com

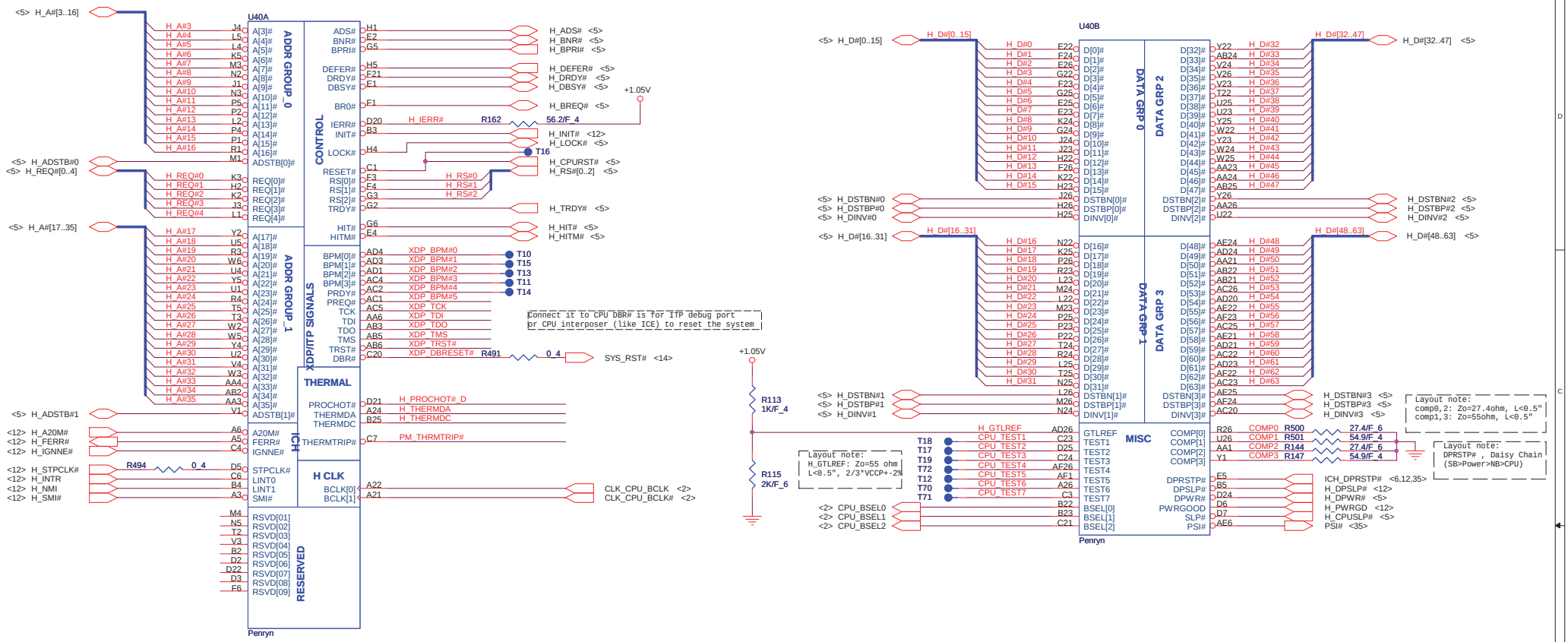

Thermal Trip

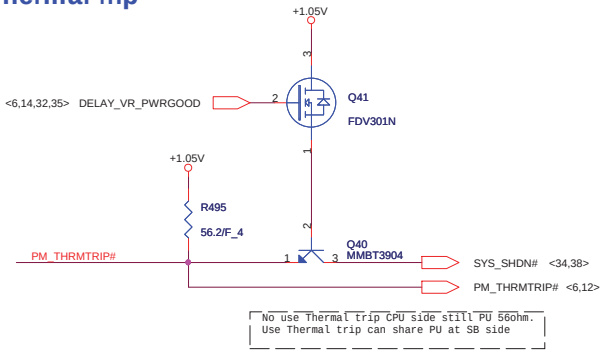

Processor hot

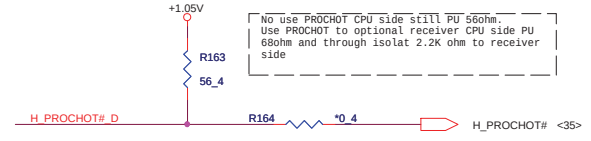

CPU Thermal monitor

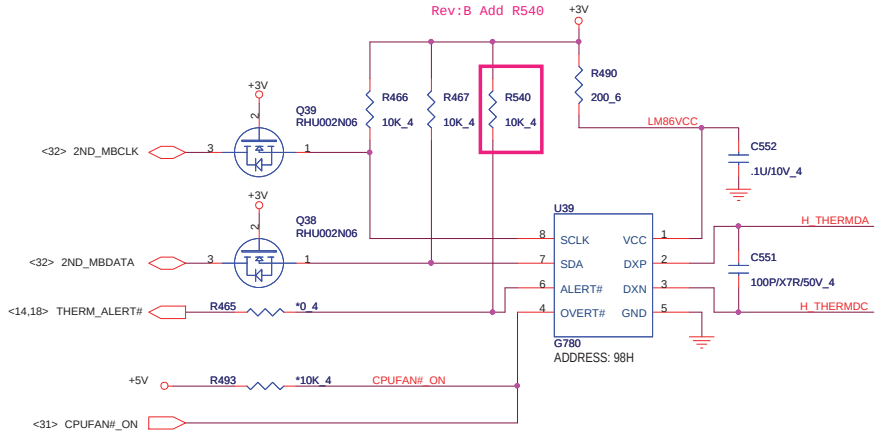

XDP PU/PD

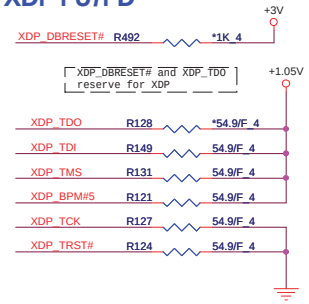

Quanta Computer Inc.

PROJECT : ZY2 & ZY6

Size	Document Number	Rev
	CPU Host Bus	1A

Date: Thursday, August 28, 2008 Sheet 3 of 40

http://hobi-elektronika.net

PDF created with FinePrint pdfFactory Pro trial version http://www.fineprint.com

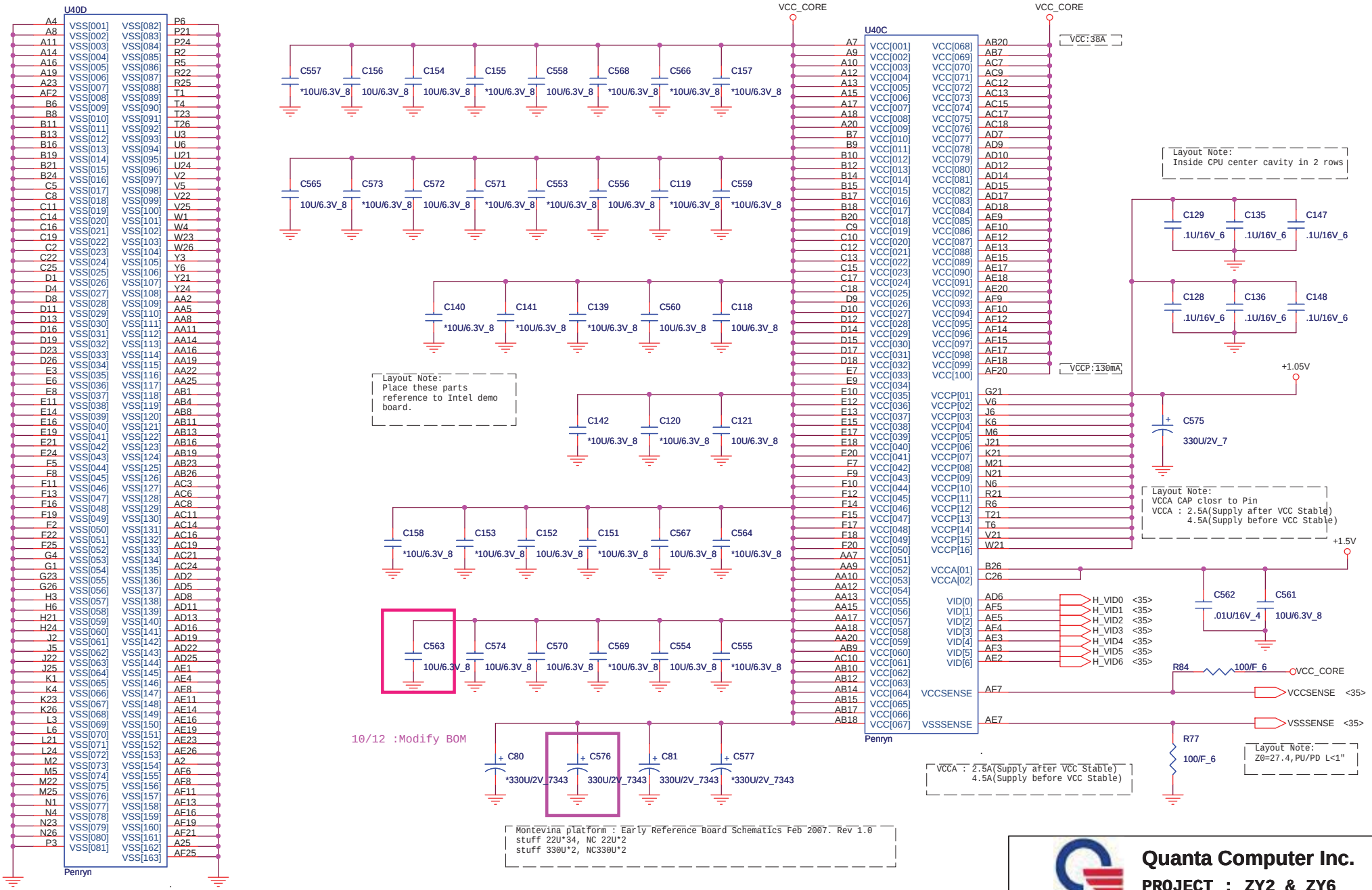

http://hobi-elektronika.net

PDF created with FinePrint pdfFactory Pro trial version http://www.fineprint.com

	QCI P/N
Intel Cantiga (G)M	AJSLB940T04
Intel Cantiga (P)M	AJSLB970T06

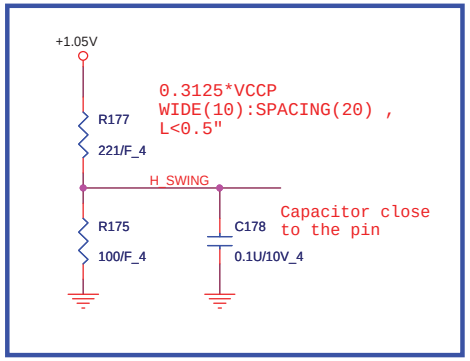

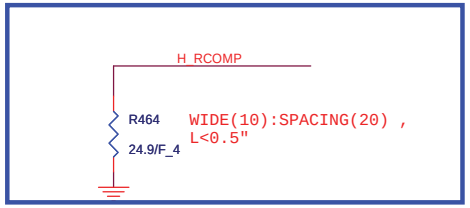

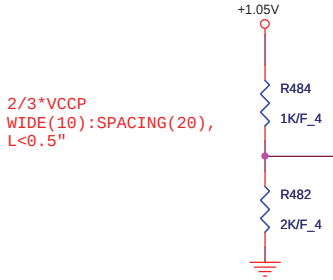

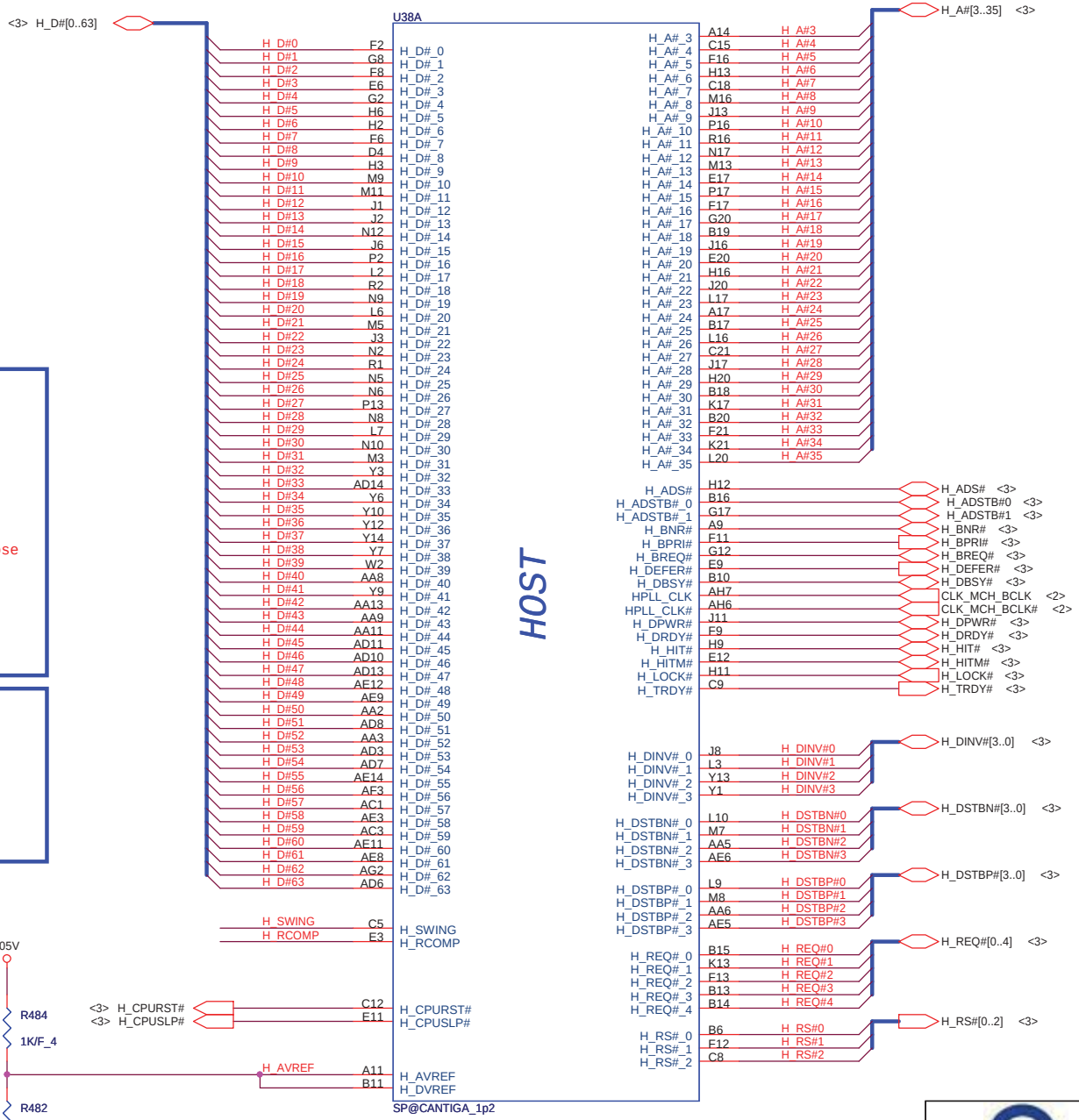

Quanta Computer Inc.

PROJECT : ZY2 & ZY6

Size	Document Number	Rev
	GMCH HOST	1A

Date: Thursday, August 28, 2008 Sheet 5 of 40

http://hobi-elektronika.net

PDF created with FinePrint pdfFactory Pro trial version http://www.fineprint.com

Strap table

Pin Name	Strap description	Configuration
CFG[2:0]	FSB Frequency Select	000= FSB 1066MHz 010 = FSB 800MHz 011 = FSB 667MHz
CFG[4:3]	Reserved	
CFG5	DMI X2 Select	0 = DMI X2 1 = DMI X4(Default)
CFG6	iTPM Host Interface	0 = iTPM Host Interface is enabled 1 = iTPM Host Interface is disabled(Default)
CFG7	ME TLS Confidentiality	0 = AMT Firmware will use TLS cipher suite with no confidentiality 1 = AMT Firmware will use TLS cipher suite with confidentiality(Default)
CFG8	Reserved	
CFG9	PCIE Graphics Lane Reversal	0 = Reverse Lanes 1 = Normal operation(Default)
CFG10	PCIE Loopback enable	0 = Enabled 1 = Disabled (Default)
CFG11	Reserved	
CFG12	ALLZ	0 = ALLZ mode enable 1 = disable(Default)
CFG13	XOR	0 = XOR mode enable 1 = disable(Default)
CFG[15:14]	Reserved	
CFG16	FSB Dynamic ODT	0 = Dynamic ODT disable 1 = Dynamic ODT Enable(Default)
CFG[18:17]	Reserved	
CFG19	DMI Lane Reversal	0 = Normal (Default) 1 = Lanes Reversed
CFG20	Digital Display Port (SDVO/DP/iHDMI) Concurrent with PCIE	0 = Only Digital Display port (SDVO/DP/iHDMI) or PCIE is operational (Default) 1 = Digital Display port (SDVO/DP/iHDMI) and PCIE are operating simultaneously via PEG port
SDVO_CTRLDATA	SDVO Present	0 = No SDVO/HDMI Device Present(Default) 1 = SDVO/HDMI Device present
DDPC_CTRLDATA	Digital Display Present	0 = Digital display(HDMI/DP) device absent(Default) 1 = Digital display(HDMI/DP) device present

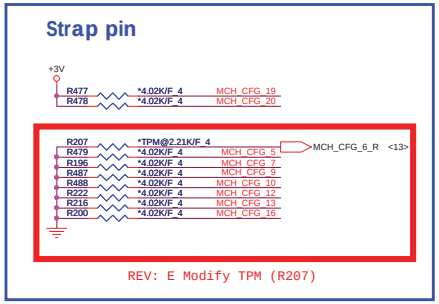

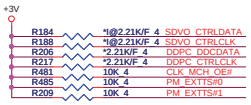

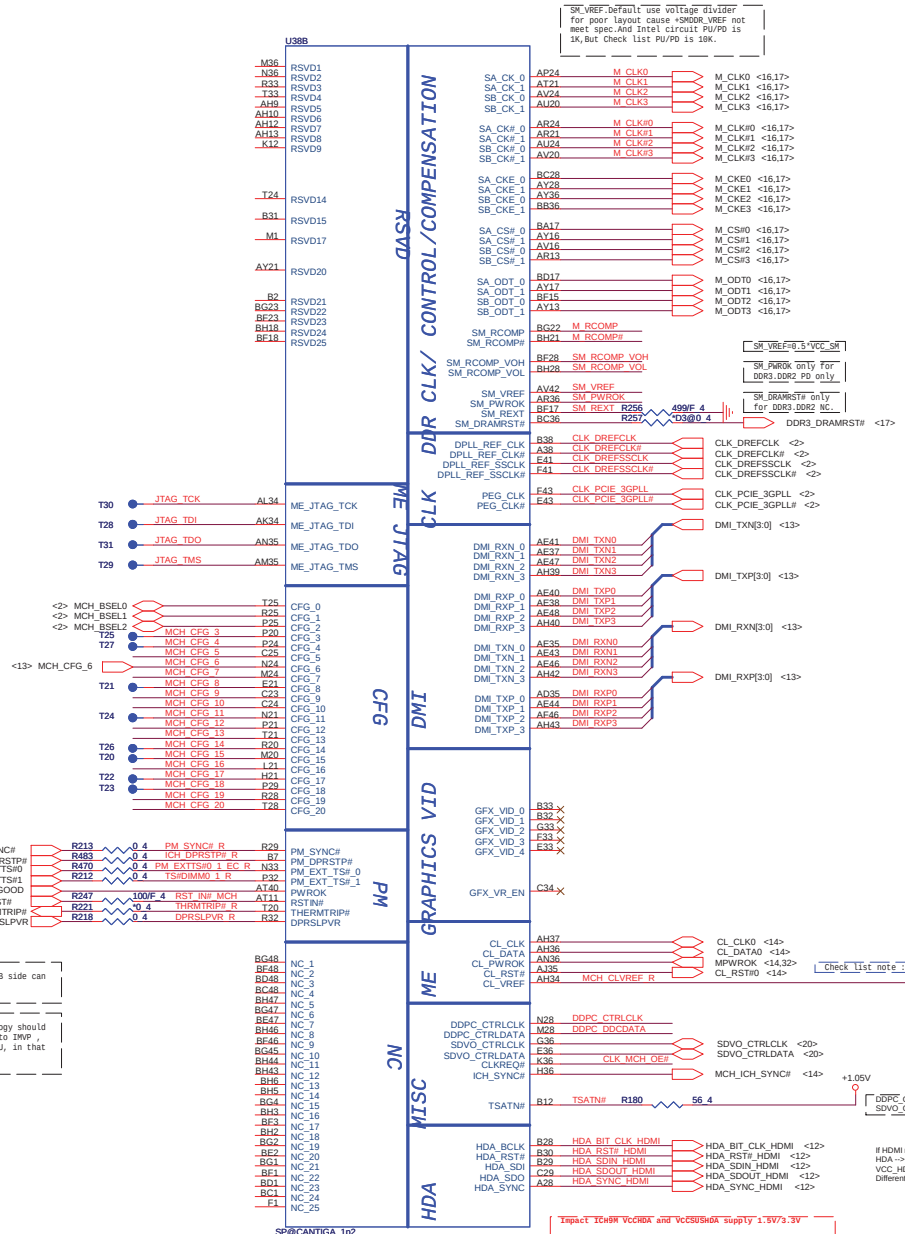

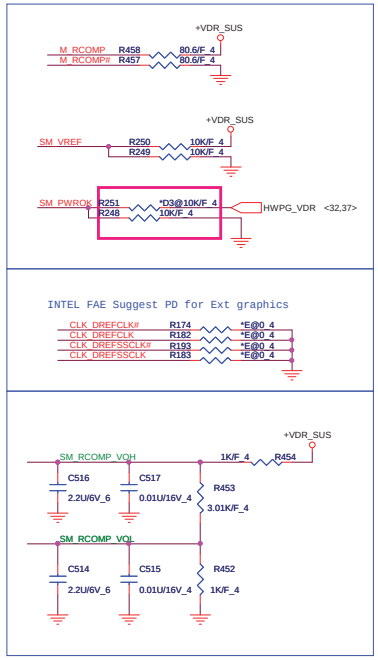

http://hobi-elektronika.net

Quanta Computer Inc.
PROJECT : ZY2 & ZY6

Size	Document Number	Rev
	GMCH DMI	1A

Date: Thursday, August 28, 2008 Sheet 6 of 40

PDF created with FinePrint pdfFactory Pro trial version http://www.fineprint.com

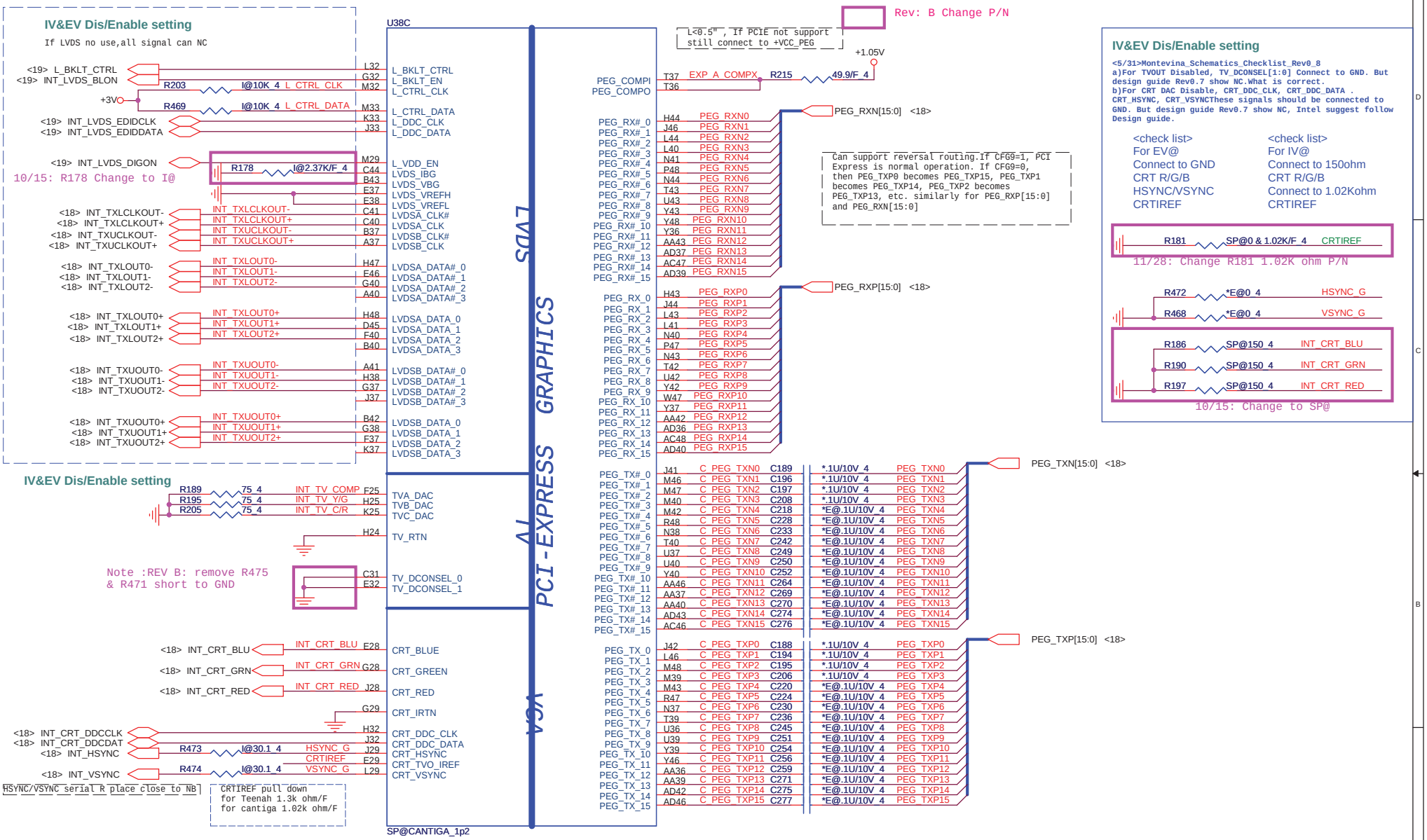

Quanta Computer Inc.

PROJECT : ZY2 & ZY6

Size	Document Number	Rev
	GMCH VGA	1A

Date: Thursday, August 28, 2008 Sheet 7 of 40

http://hobi-elektronika.net

PDF created with FinePrint pdfFactory Pro trial version http://www.fineprint.com

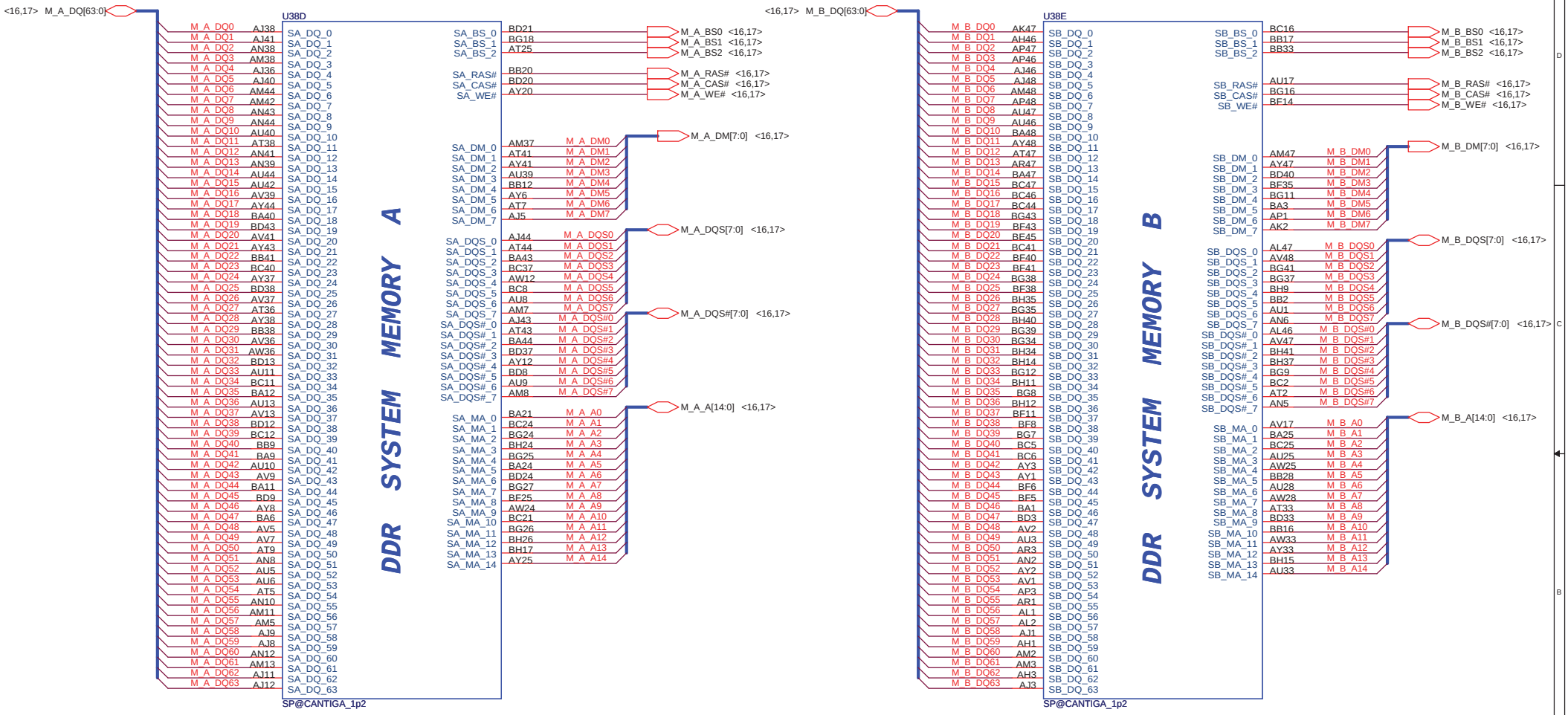

Quanta Computer Inc.

PROJECT : ZY2 & ZY6

Size	Document Number	Rev
	GMCH DDRII	1A

Date: Thursday, August 28, 2008 Sheet 8 of 40

http://hobi-elektronika.net

PDF created with FinePrint pdfFactory Pro trial version http://www.fineprint.com

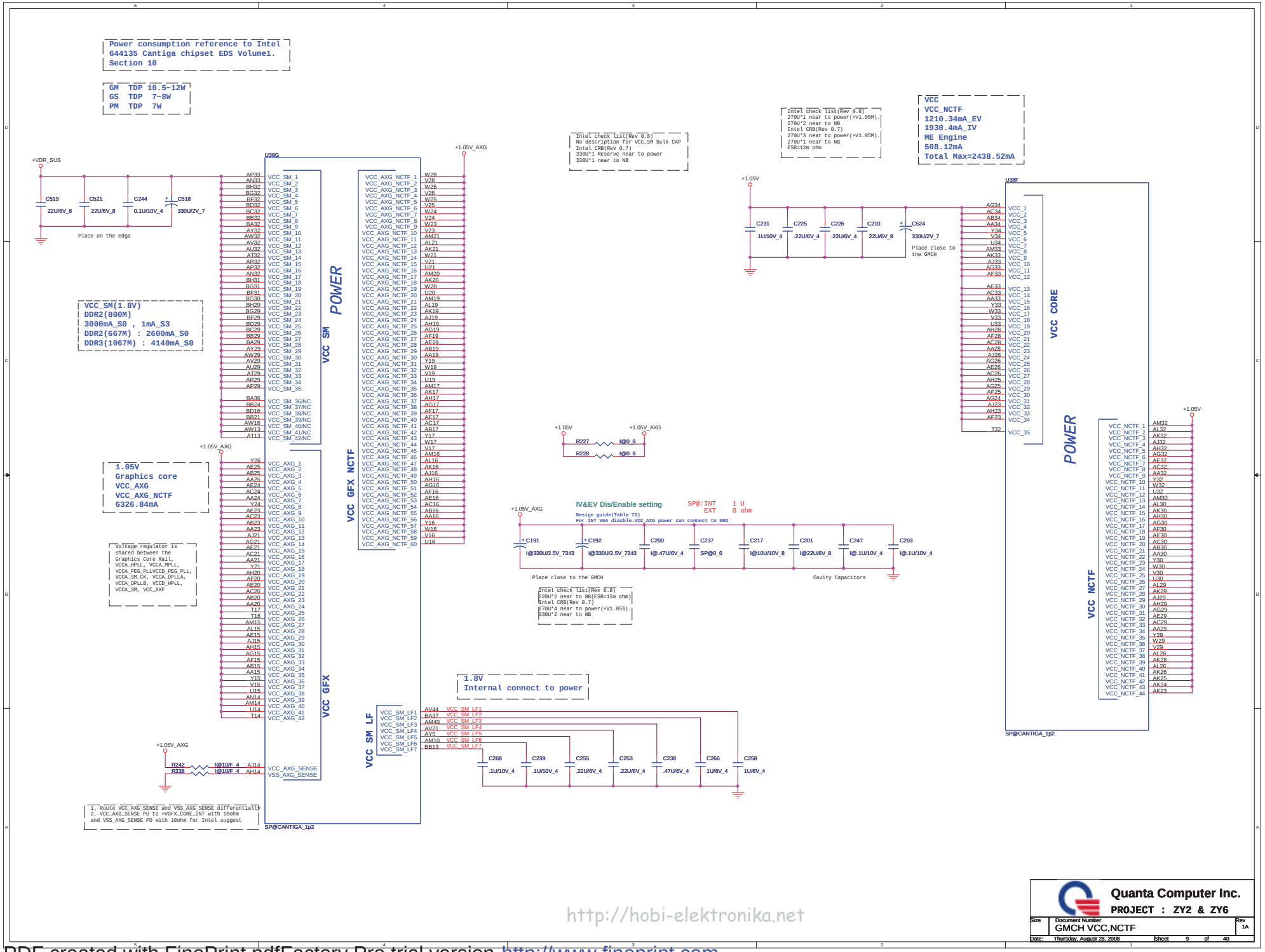

http://hobi-elektronika.net

PDF created with FinePrint pdfFactory Pro trial version http://www.fineprint.com

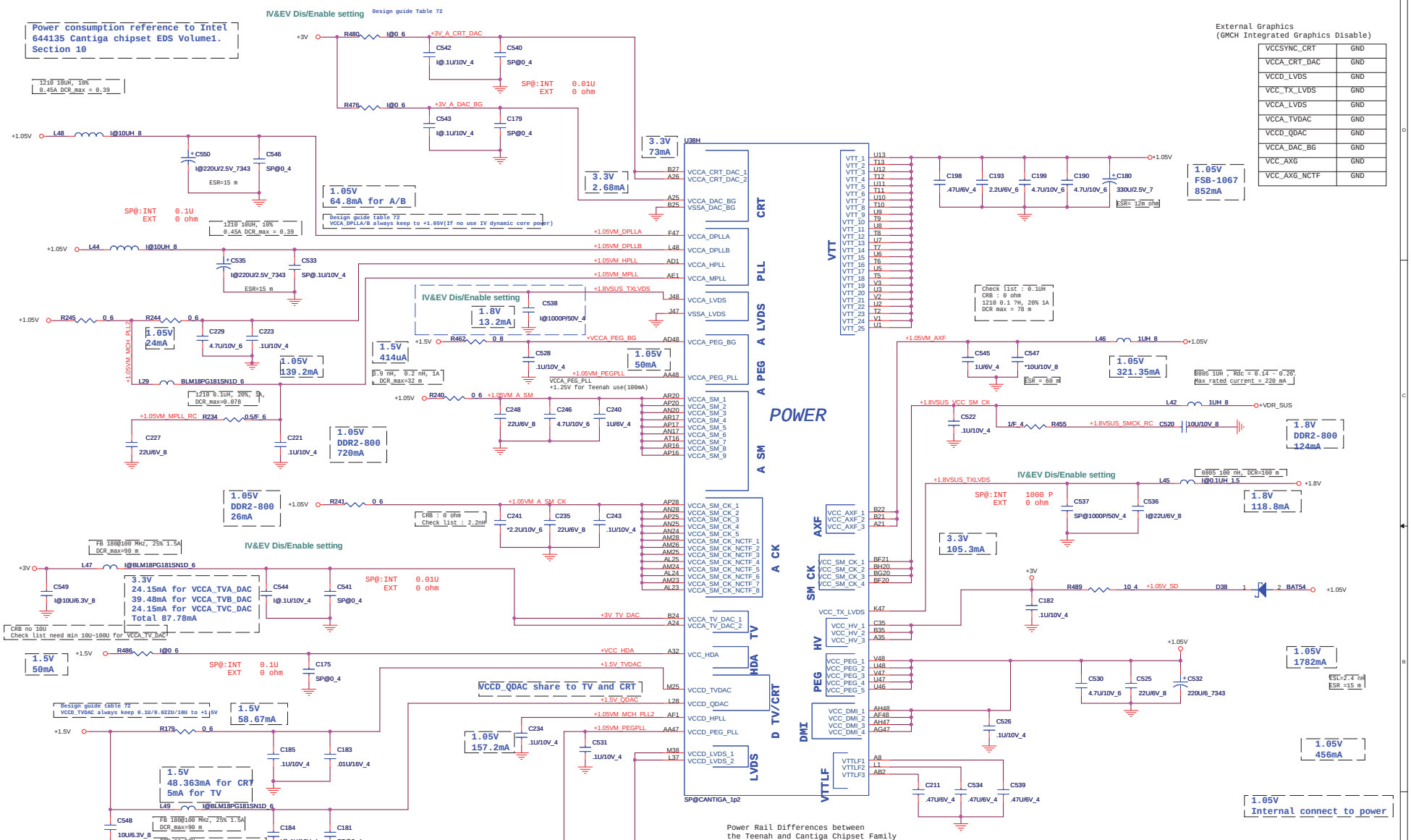

PDF created with FinePrint pdfFactory Pro trial version http://www.fineprint.com

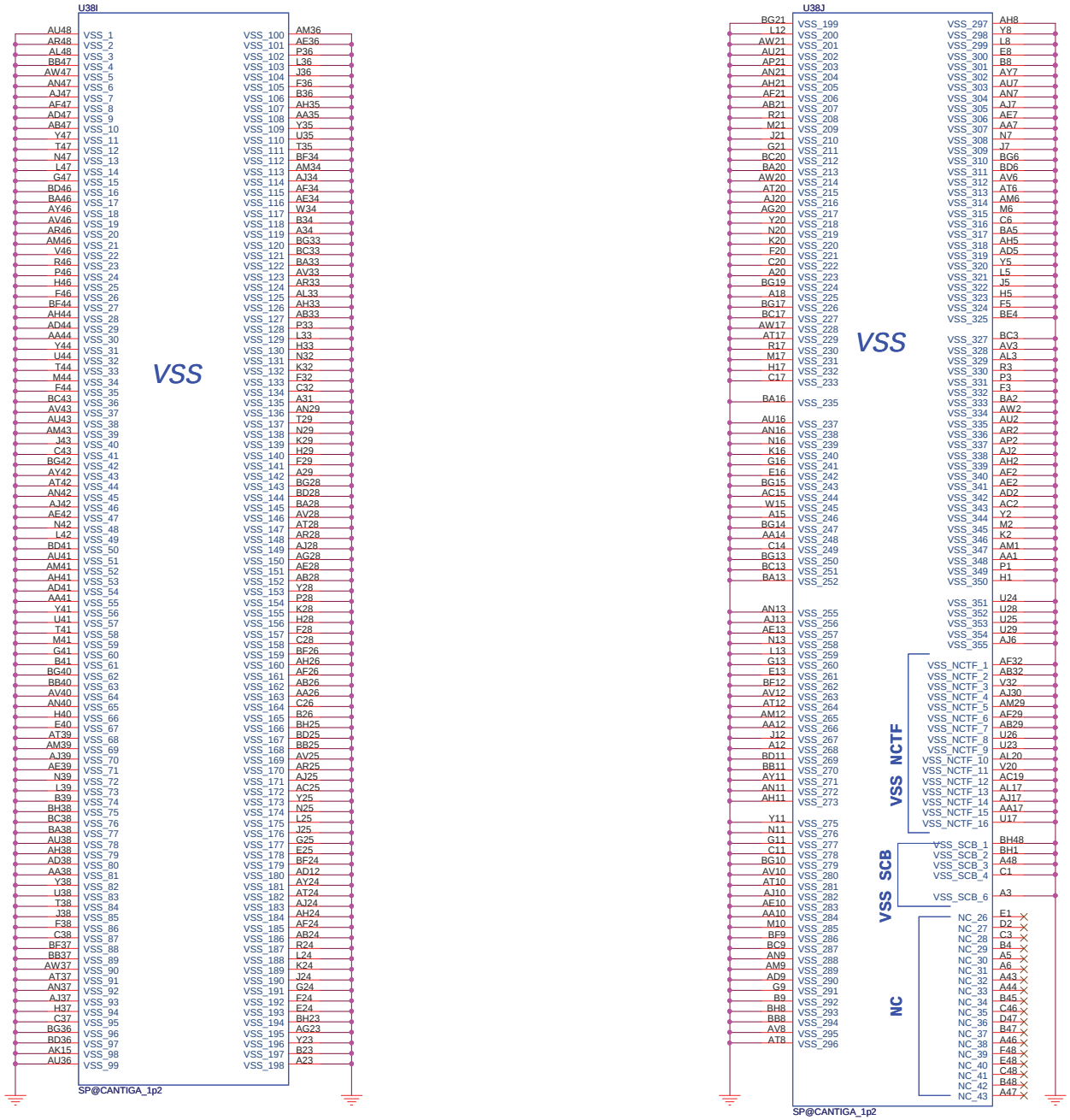

Quanta Computer Inc.

PROJECT : ZY2 & ZY6

Size	Document Number	Rev
	GMCH VSS	1A

Date: Thursday, August 28, 2008 Sheet 11 of 40

http://hobi-elektronika.net

PDF created with FinePrint pdfFactory Pro trial version http://www.fineprint.com

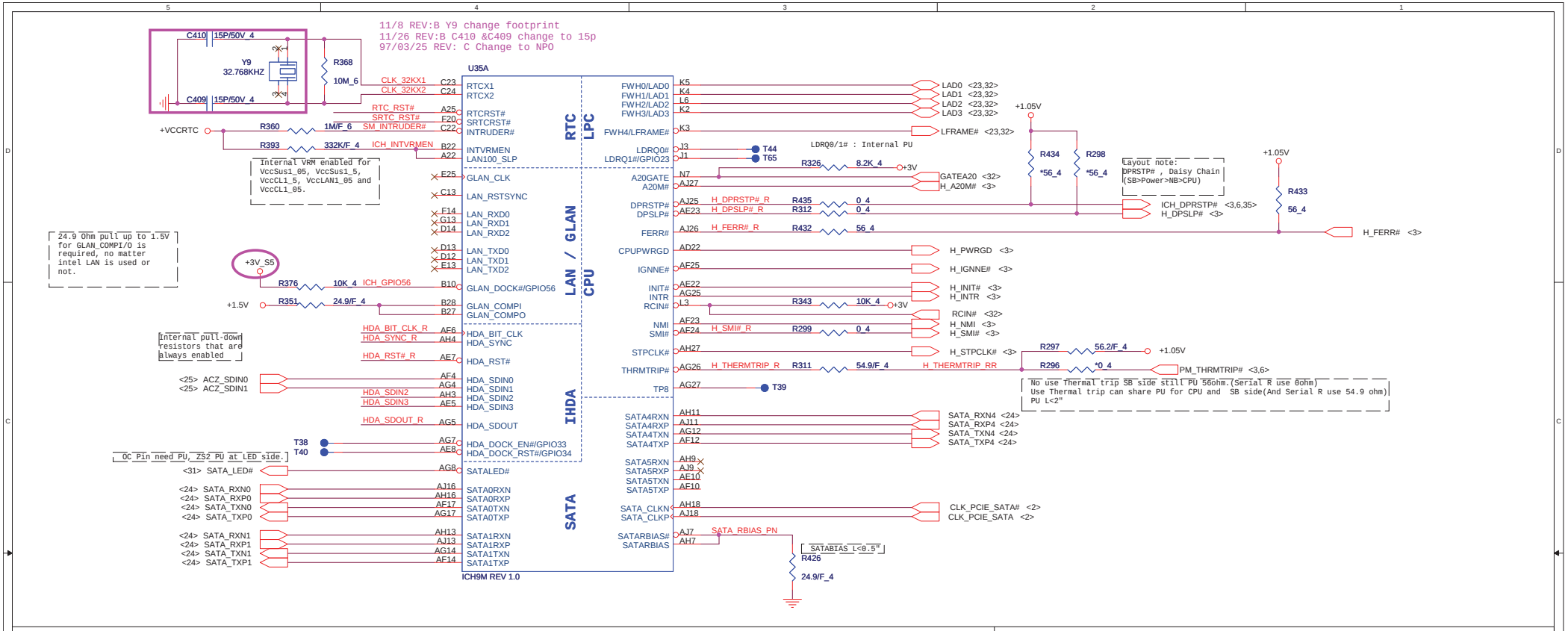

HD Audio

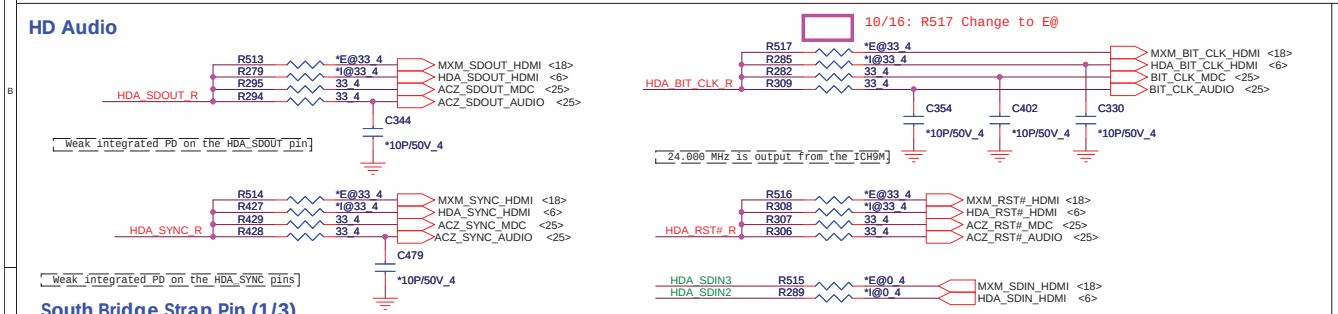

South Bridge Strap Pin (1/3)

Pin Name	Strap description	Sampled	Configuration	PU/PD
HDA_DOCK_EN/ GPIO33	Flash Descriptor Security Override Strap	PWROK	0 = The Flash Descriptor Security will be overridden. 1 = The security measures defined in the Flash Descriptor will be in effect	This strap should only be enabled in manufacturing environments using an external pull-up resistor.
SATALED#	PCI Express Lane Reversal (Lanes 1-4)	PWROK	Internal PU	
TP3	XOR Chain Entrance	PWROK		<14> ICH_TP3 ICH_TP3 R406 *1K_4
HDA_SDOUT	XOR Chain Entrance /PCI Express* Port Config 1 bit 1(Port 1-4)	PWROK		HDA_SDOUT_R R310 *1K_4 +3V

ICH_TP3	HDA_SDOUT	Description
0	0	RSVD
0	1	Enter XOR Chain
1	0	Normal opration(Default)
1	1	Set PCIE port config bit 1

RTC

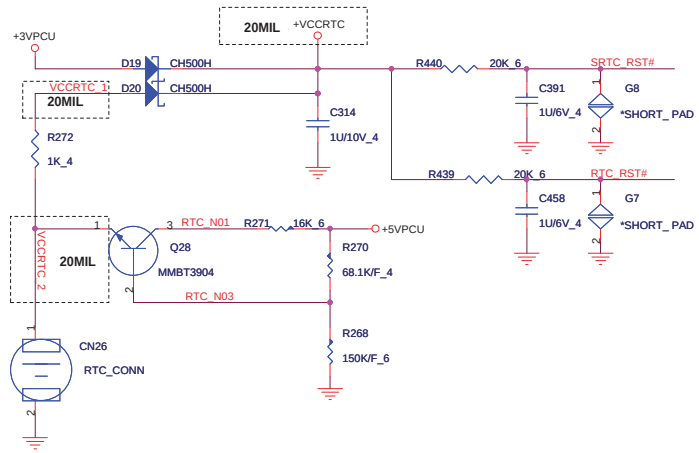

Quanta Computer Inc.

PROJECT : ZY2 & ZY6

Size	Document Number	Rev
	ICH9M HOST	1A

Date: Thursday, August 28, 2008 Sheet 12 of 40

http://hobi-elektronika.net

PDF created with FinePrint pdfFactory Pro trial version http://www.fineprint.com

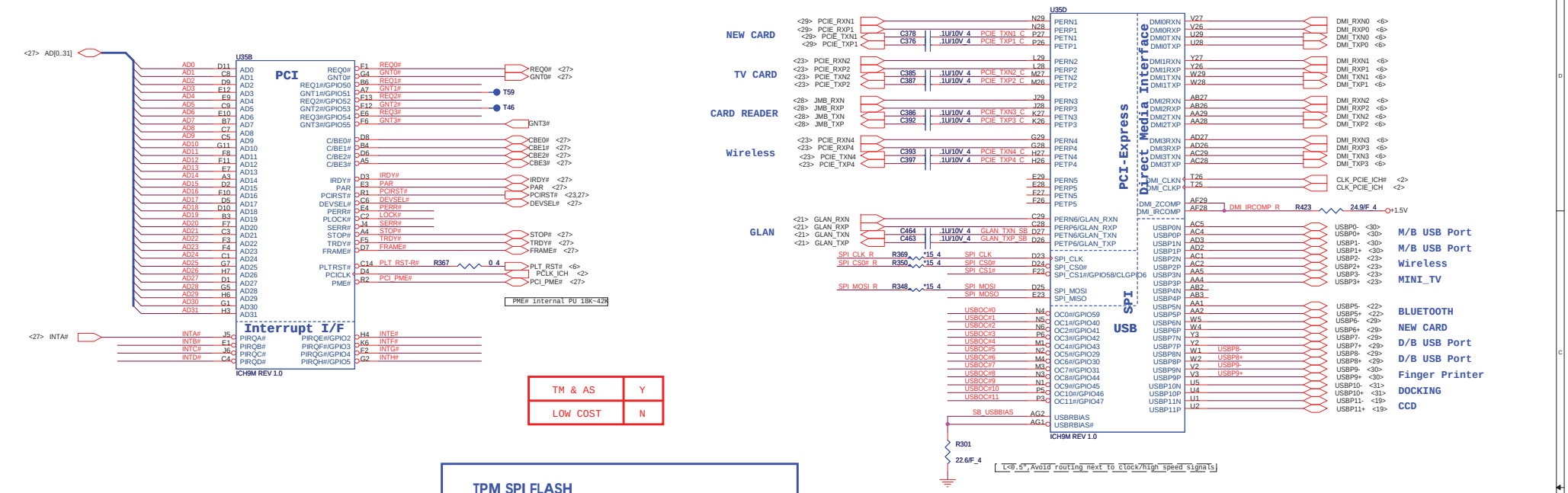

TM & AS	Y
LOW COST	N

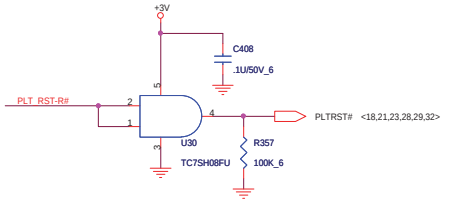

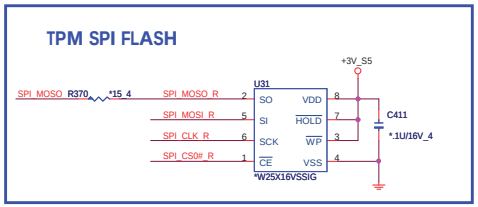

PCI ROUTING TABLE	IDSEL	INTERUPT	DEVICE
REQ0# / GNT0#	AD20	INTA#	OZ601T

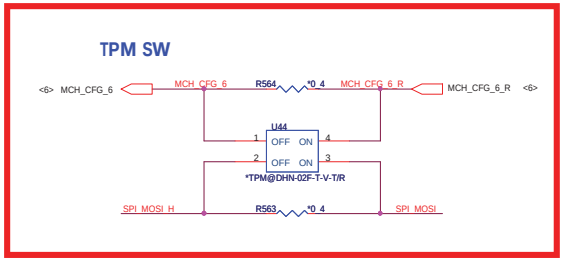

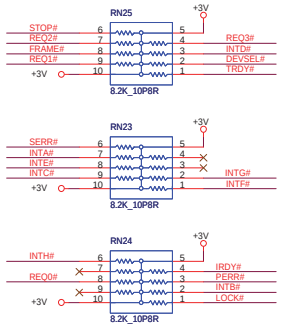

South Bridge Strap Pin (2/3)

Pin Name	Strap description	Sampled	Configuration	PU/PD
HDA_SYNC	PCI Express Port Config 1 bit 0 (Port 1-4)	PWROK	0 = Default 1 = Setting bit 0	
GNT2# / GPIO53	PCI Express Port Config 2 bit 2 (Port 5-6)	PWROK	0 = Setting bit 2 1 = Default	
GNT1# / GPIO51	ESI Strap(Server Only)	PWROK	0 = DMI for ESI-compatible 1 = Default	
GNT3# / GPIO55	Top-Block Swap Override	PWROK	0 = "top-block swap" mode 1 = Default	GNT3# R347 *1K_4
SPI_MOSI	Integrated TPM Enable	CLPWROK	0 = INT TPM disable(Default) 1 = INT TPM enable	SPI_MOSI_H R329 *TPM@10K_4 +3V_S5
GNT0#	Boot BIOS Selection 0	PWROK	PCI_GNT#0 / SPI_CS#1 / Boot Location 0 / 1 / SPI(Default)	GNT0# R344 *1K_4
SPI_CS1# / GPIO58 / CLGPIO6	Boot BIOS Selection 1	CLPWROK	1 / 0 / PCI 1 / 1 / LPC	SPI_CS1# R340 *1K_4

http://hobi-elektronika.net

Quanta Computer Inc.
PROJECT : ZY2 & ZY6

Size	Document Number	Rev
	ICH9M PCIE / PCI / USB	1A

Date: Thursday, August 28, 2008 Sheet 13 of 40

PDF created with FinePrint pdfFactory Pro trial version http://www.fineprint.com

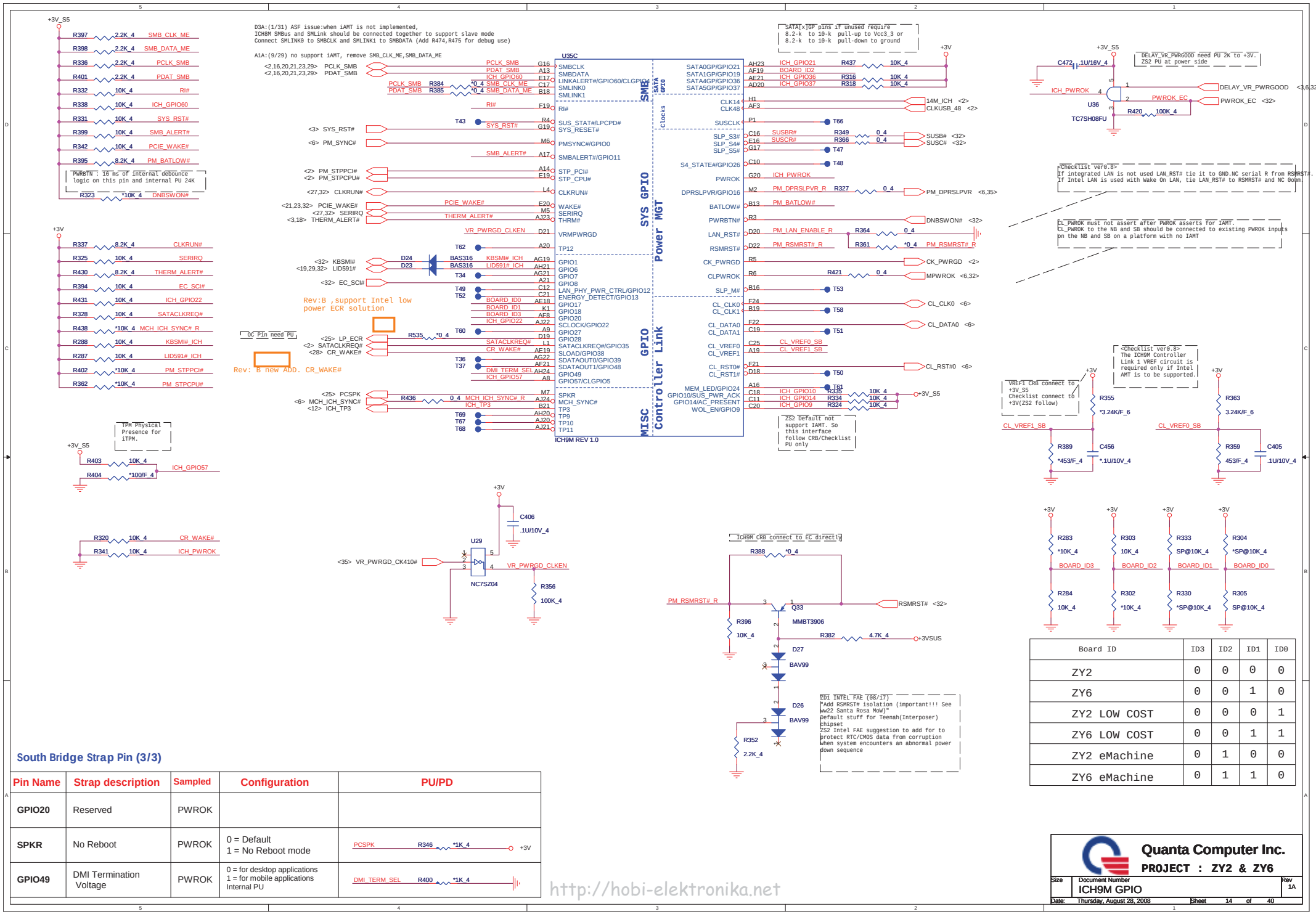

South Bridge Strap Pin (3/3)

Pin Name	Strap description	Sampled	Configuration	PU/PD
GPIO20	Reserved	PWROK		
SPKR	No Reboot	PWROK	0 = Default 1 = No Reboot mode	PCSPK R346 *1K_4 +3V
GPIO49	DMI Termination Voltage	PWROK	0 = for desktop applications 1 = for mobile applications Internal PU	DMI_TERM_SEL R400 *1K_4

Board ID	ID3	ID2	ID1	ID0
ZY2	0	0	0	0
ZY6	0	0	1	0
ZY2 LOW COST	0	0	0	1
ZY6 LOW COST	0	0	1	1
ZY2 eMachine	0	1	0	0
ZY6 eMachine	0	1	1	0

http://hobi-elektronika.net

PDF created with FinePrint pdfFactory Pro trial version http://www.fineprint.com

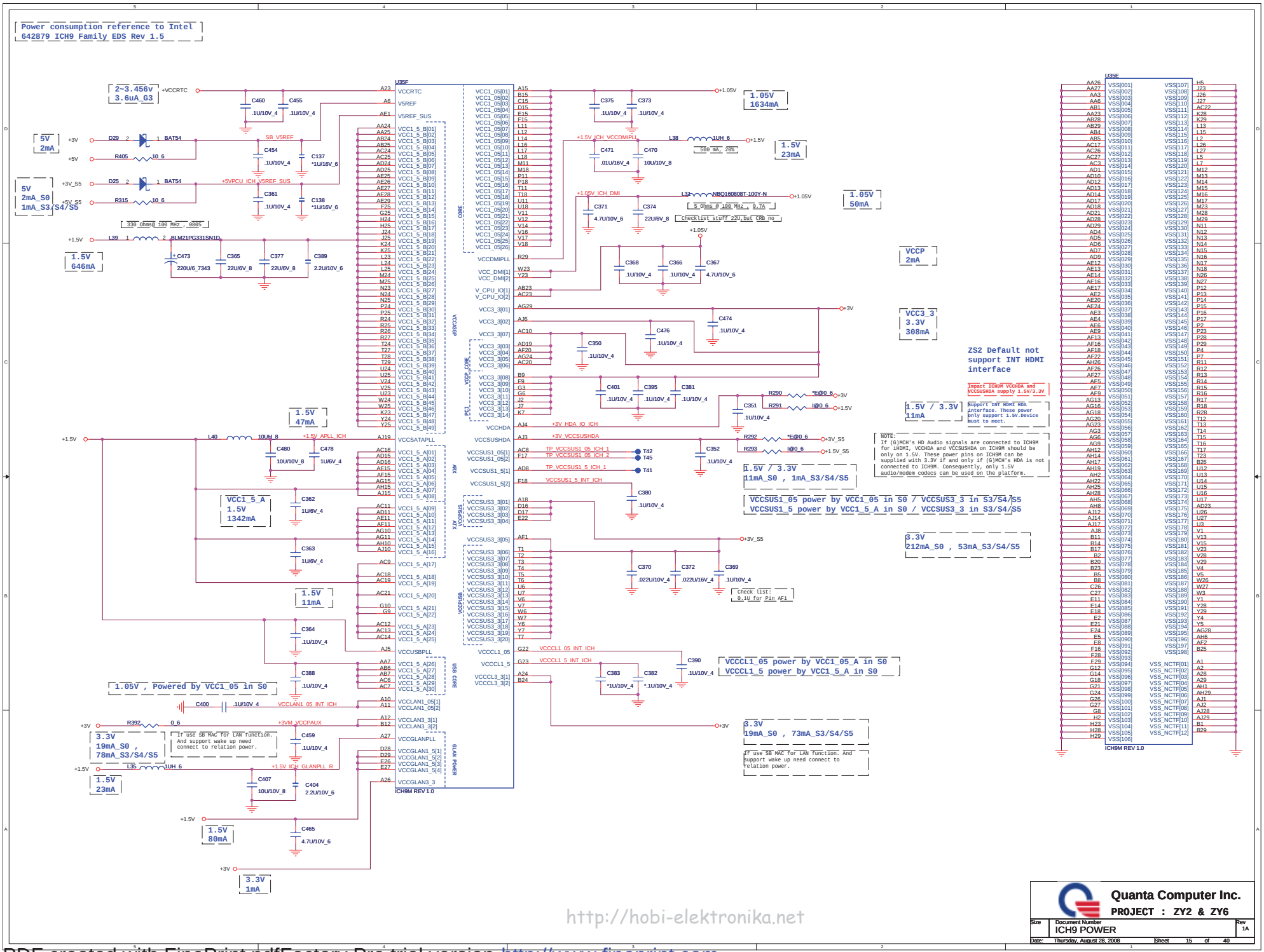

http://hobi-elektronika.net

PDF created with FinePrint pdfFactory Pro trial version http://www.fineprint.com

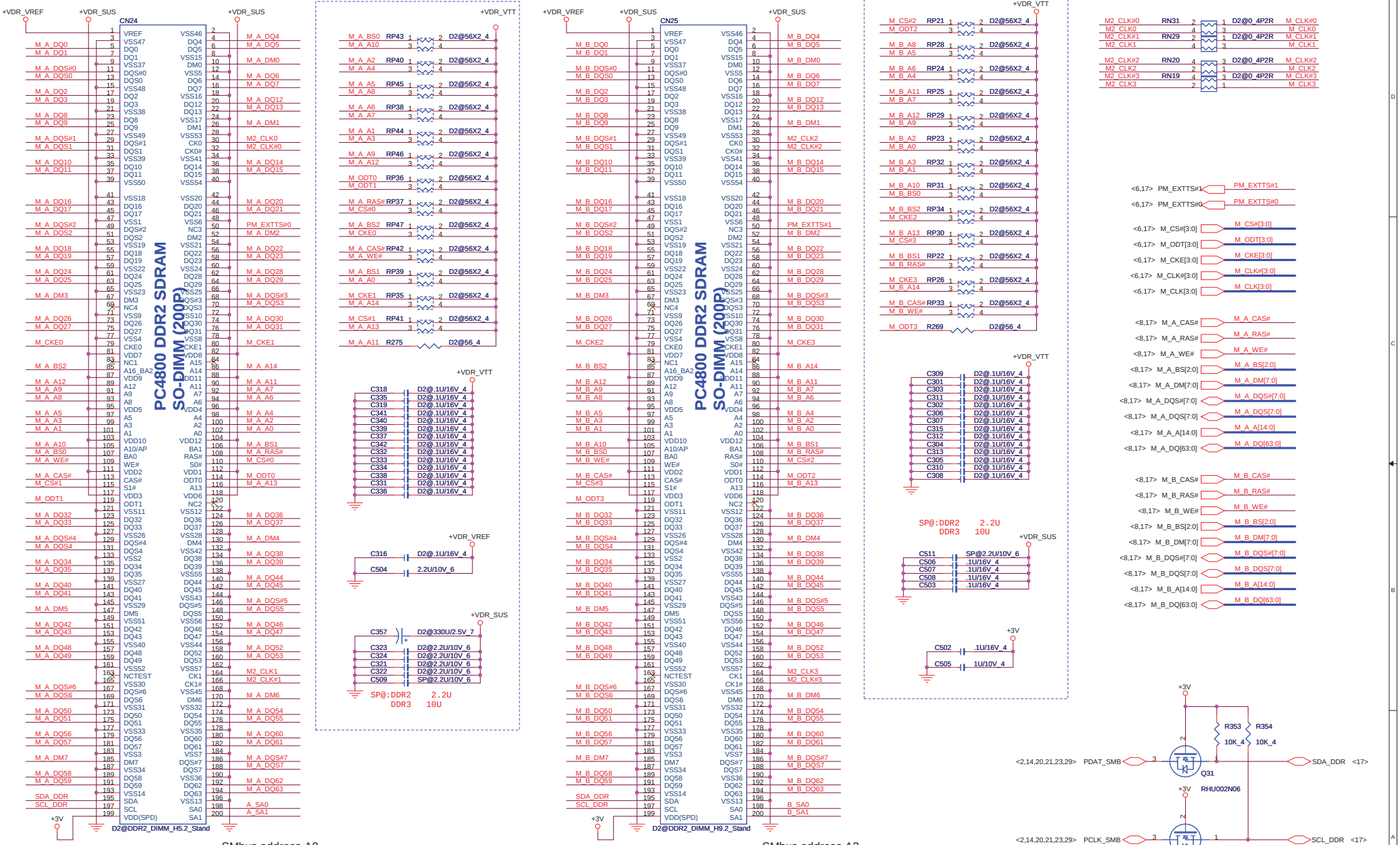

http://hobi-elektronika.net

PDF created with FinePrint pdfFactory Pro trial version http://www.fineprint.com

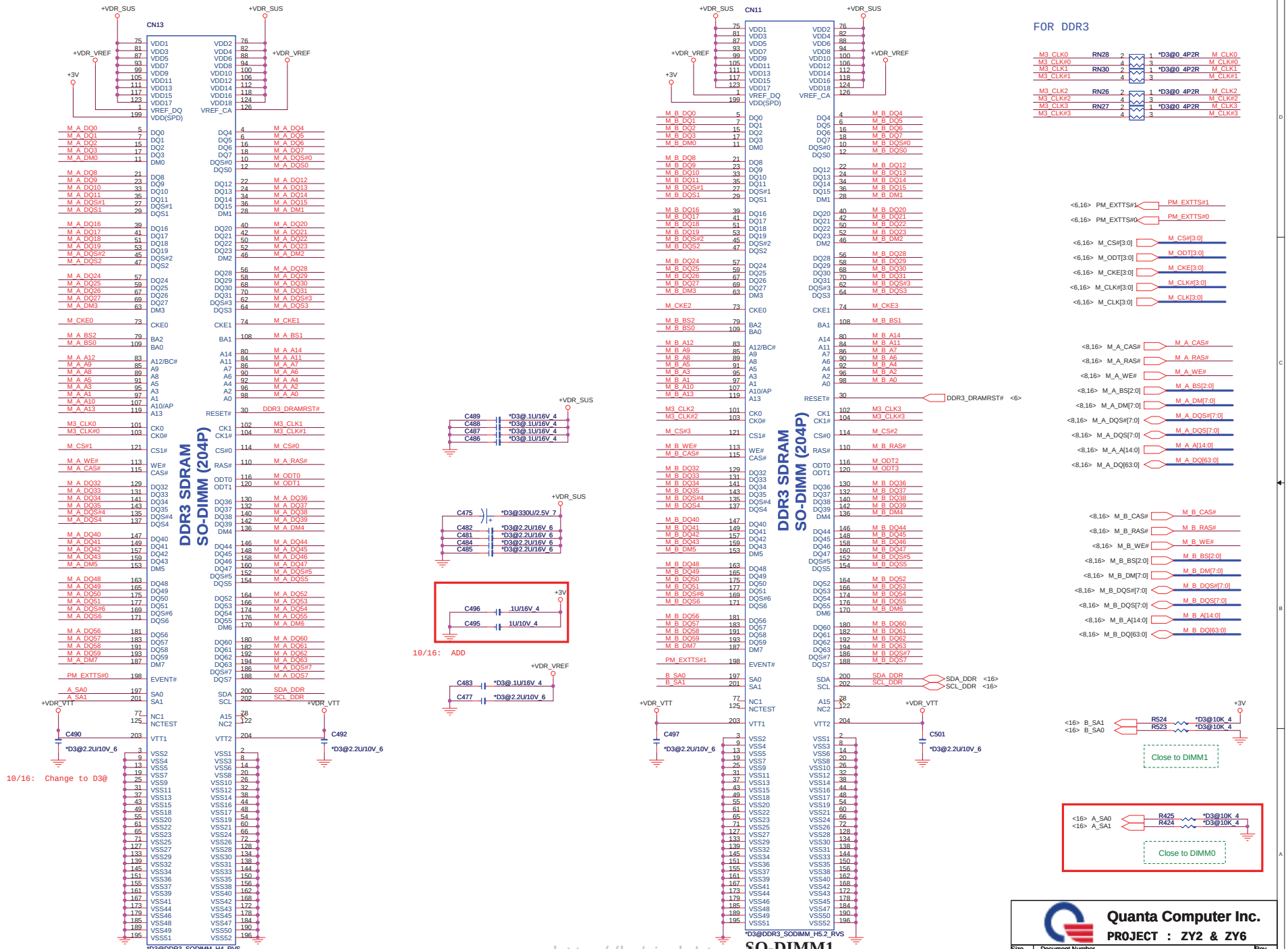

http://hobi-elektronika.net

PDF created with FinePrint pdfFactory Pro trial version http://www.fineprint.com

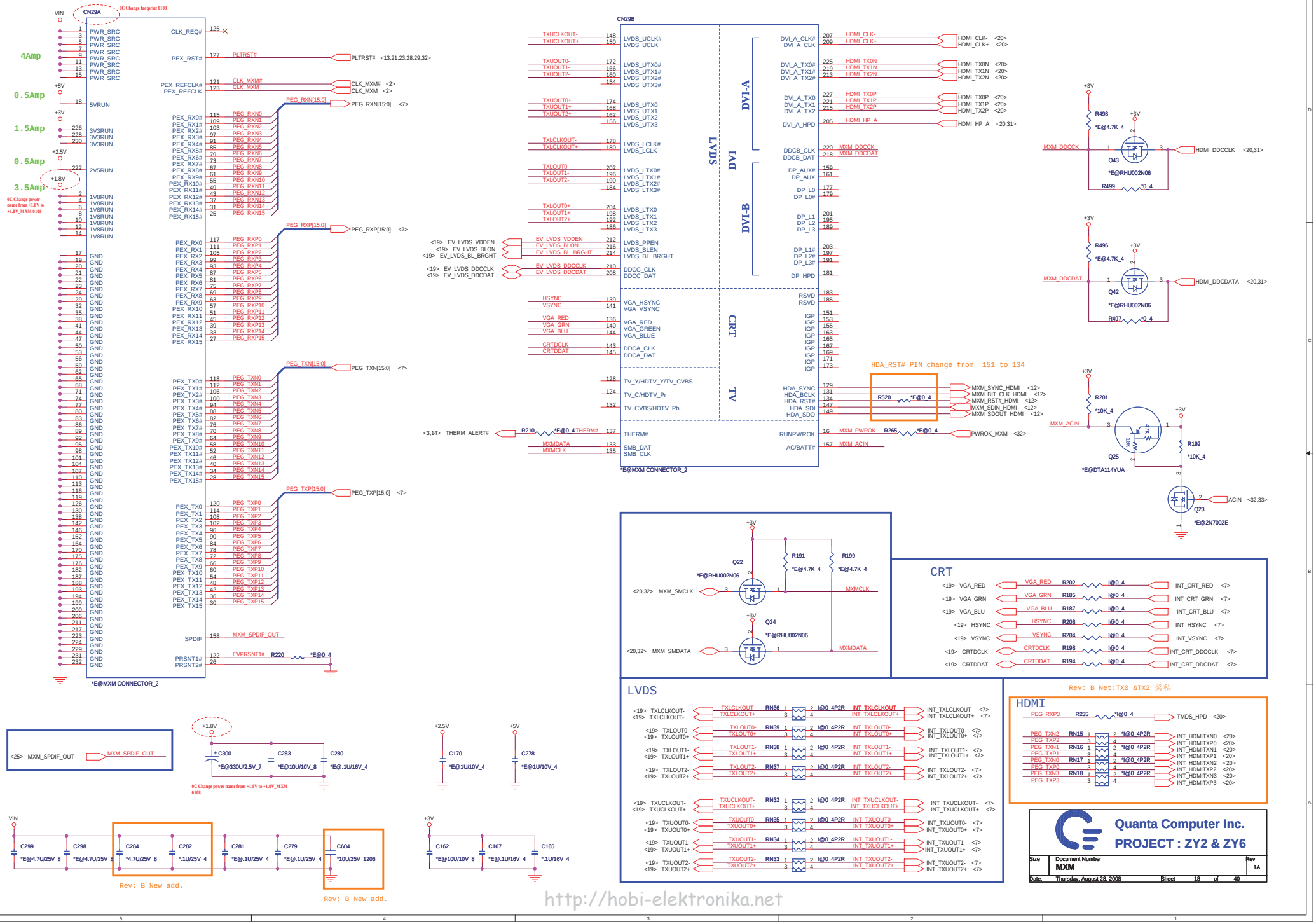

http://hobi-elektronika.net

PDF created with FinePrint pdfFactory Pro trial version http://www.fineprint.com

CRT Select

CRT SWITCH

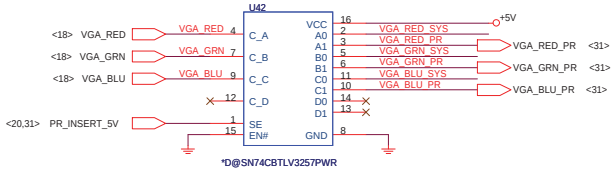

CRT CONNECTOR AND ESD

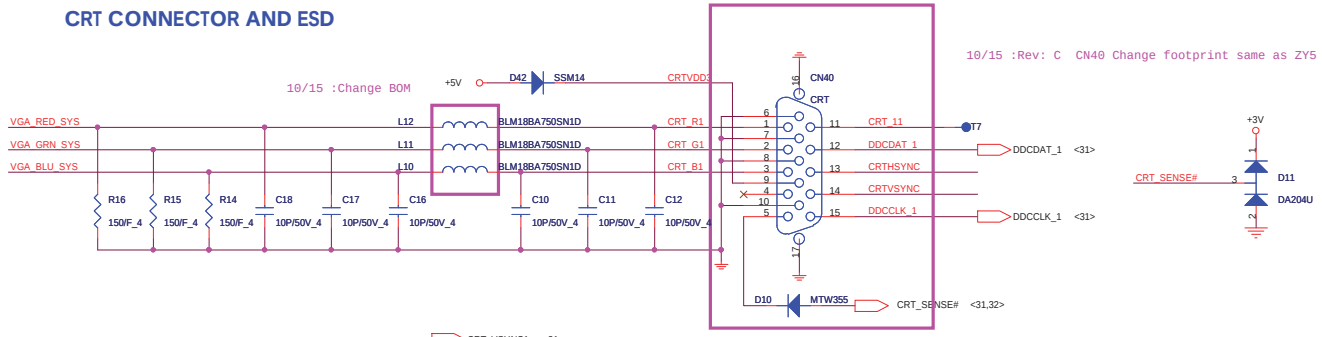

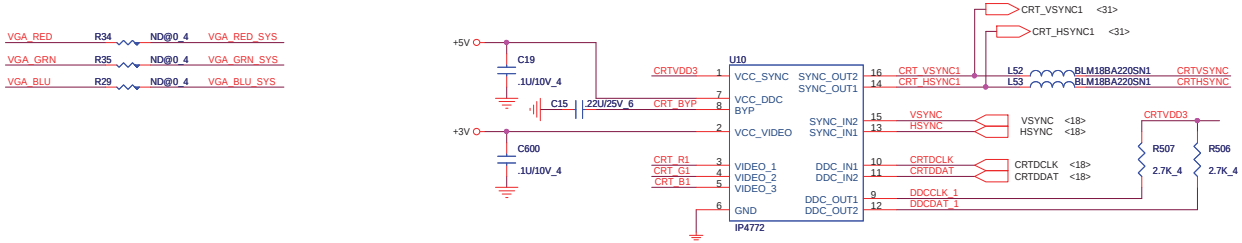

LVDS

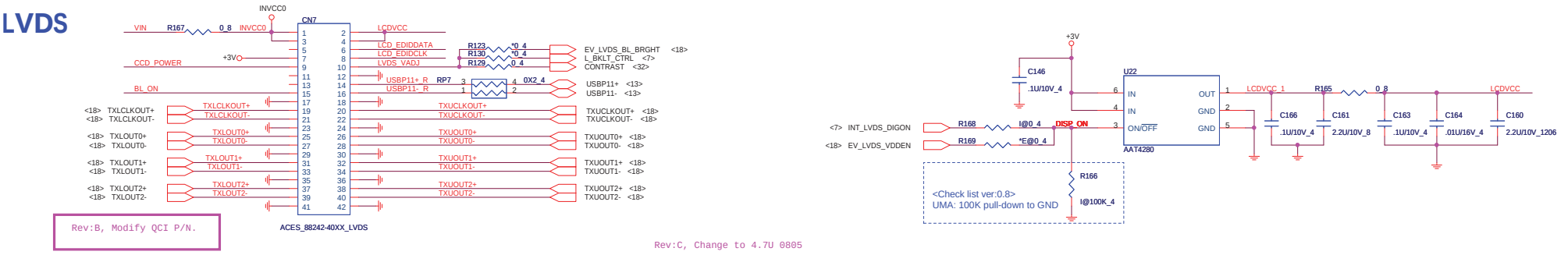

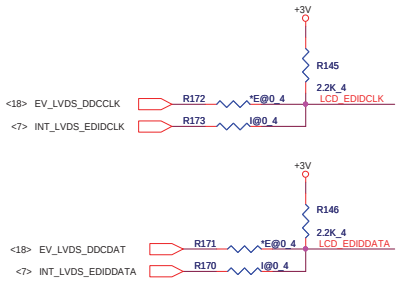

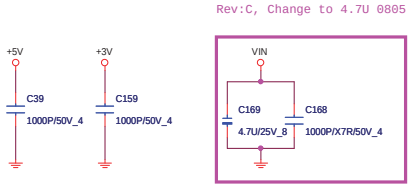

CAMERA MODULE CONNECTOR

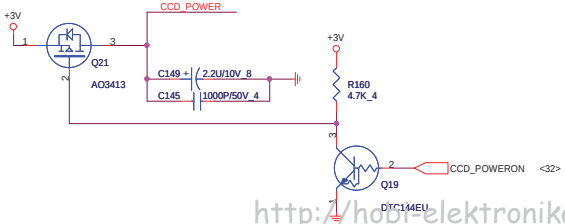

Backlight Control

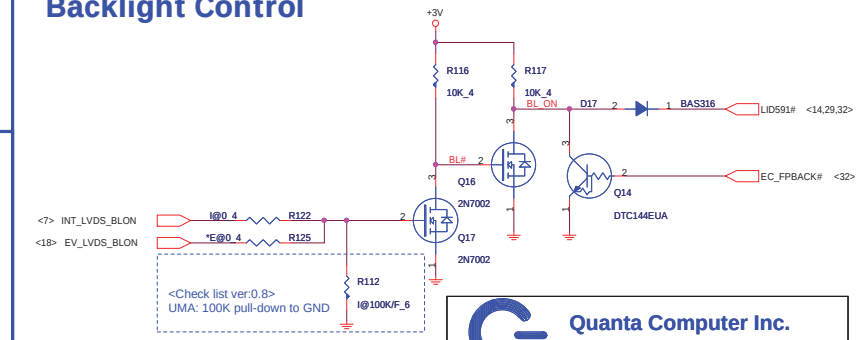

Quanta Computer Inc.
PROJECT : ZY2 & ZY6

Size	Document Number	Rev
	CRT	1A
Date: Thursday, August 28, 2008	Sheet 19 of 40	

http://hobi-elektronika.net

PDF created with FinePrint pdfFactory Pro trial version http://www.fineprint.com

DVI-I CONNECTOR (DVI-D)

	QCI P/N
PI3VDP411LS	ALP411LS000
Ch7318A	AL007318000
PS8101	

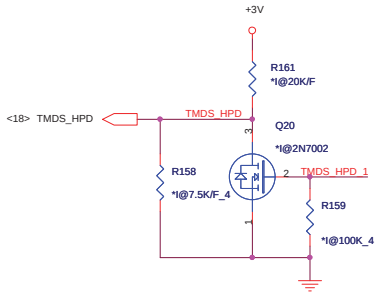

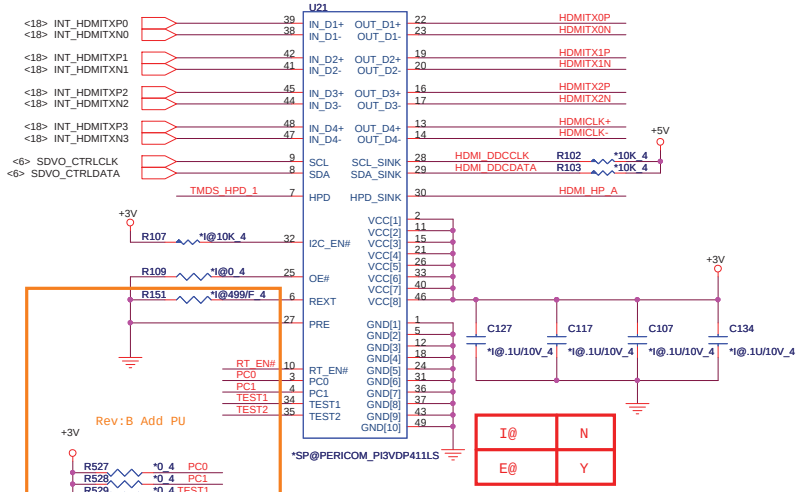

Rev:B Add PU

I@	N
E@	Y

LOW COST	N
TM & AS	Y

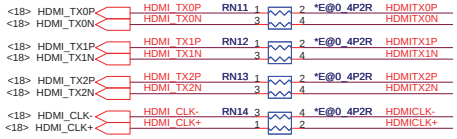

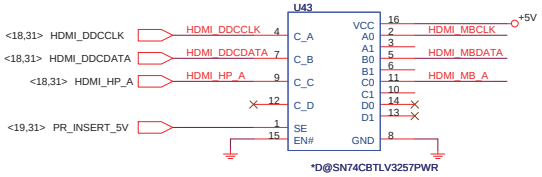

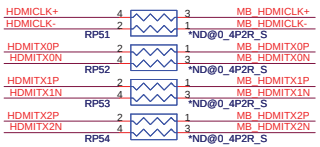

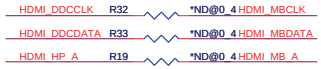

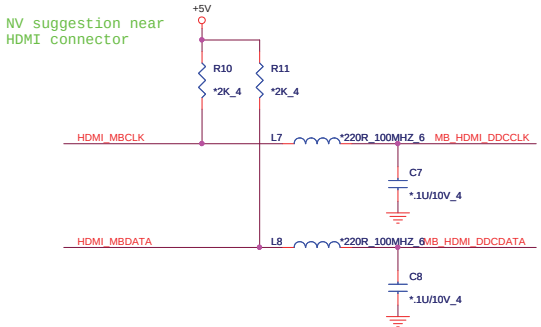

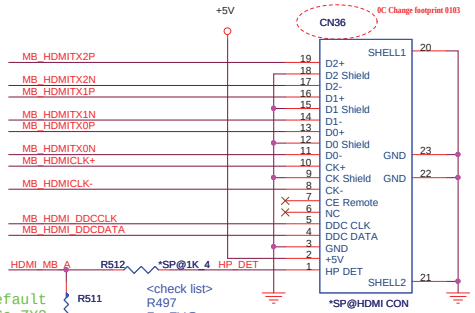

HDMI monitor default
have PU to 5V.So ZY3
PD for level
change.And serial R
for current limited

R511 *SP@10K_4

<check list>
R497
For EV@
Connect to 1K
For IV@
Connect to 0ohm

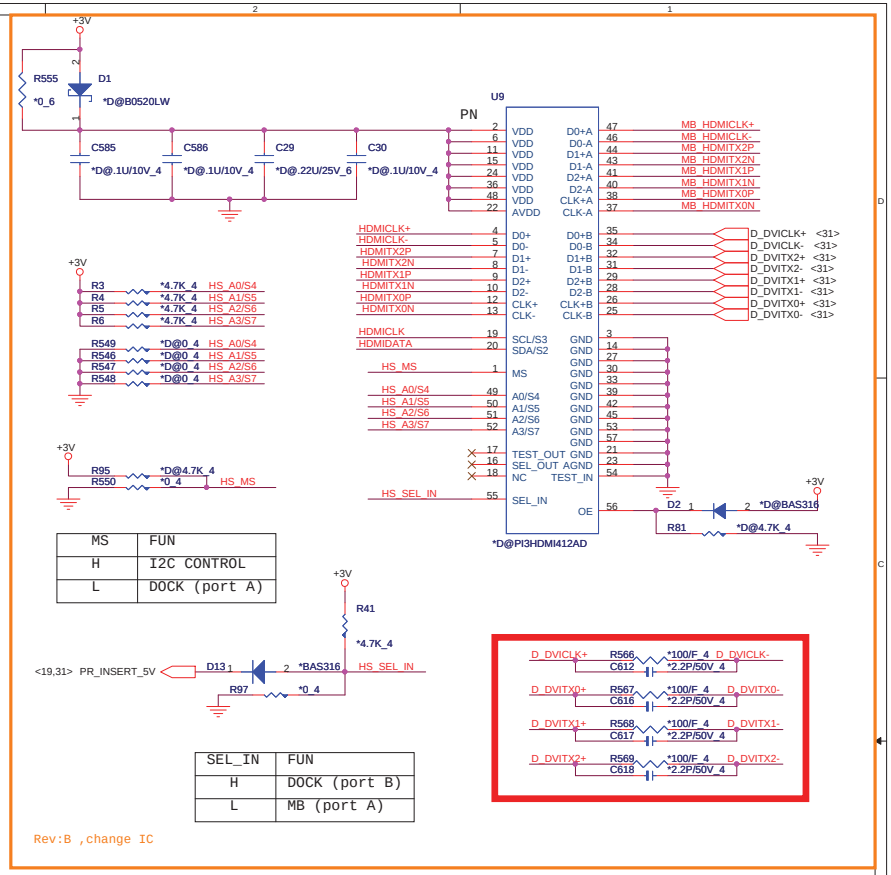

MS	FUN
H	I2C CONTROL
L	DOCK (port A)

SEL_IN	FUN
H	DOCK (port B)
L	MB (port A)

Rev:B ,change IC

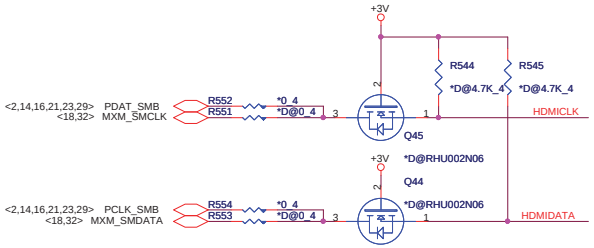

LOW COST	N
TM & AS	Y

Quanta Computer Inc.
PROJECT : ZY2 & ZY6

Size	Document Number	Rev
	LVDS/HDMI/CAMERA/LID	1A

Date: Tuesday, August 12, 2008 Sheet 20 of 40

http://hobi-elektronika.net

PDF created with FinePrint pdfFactory Pro trial version http://www.fineprint.com

LAN

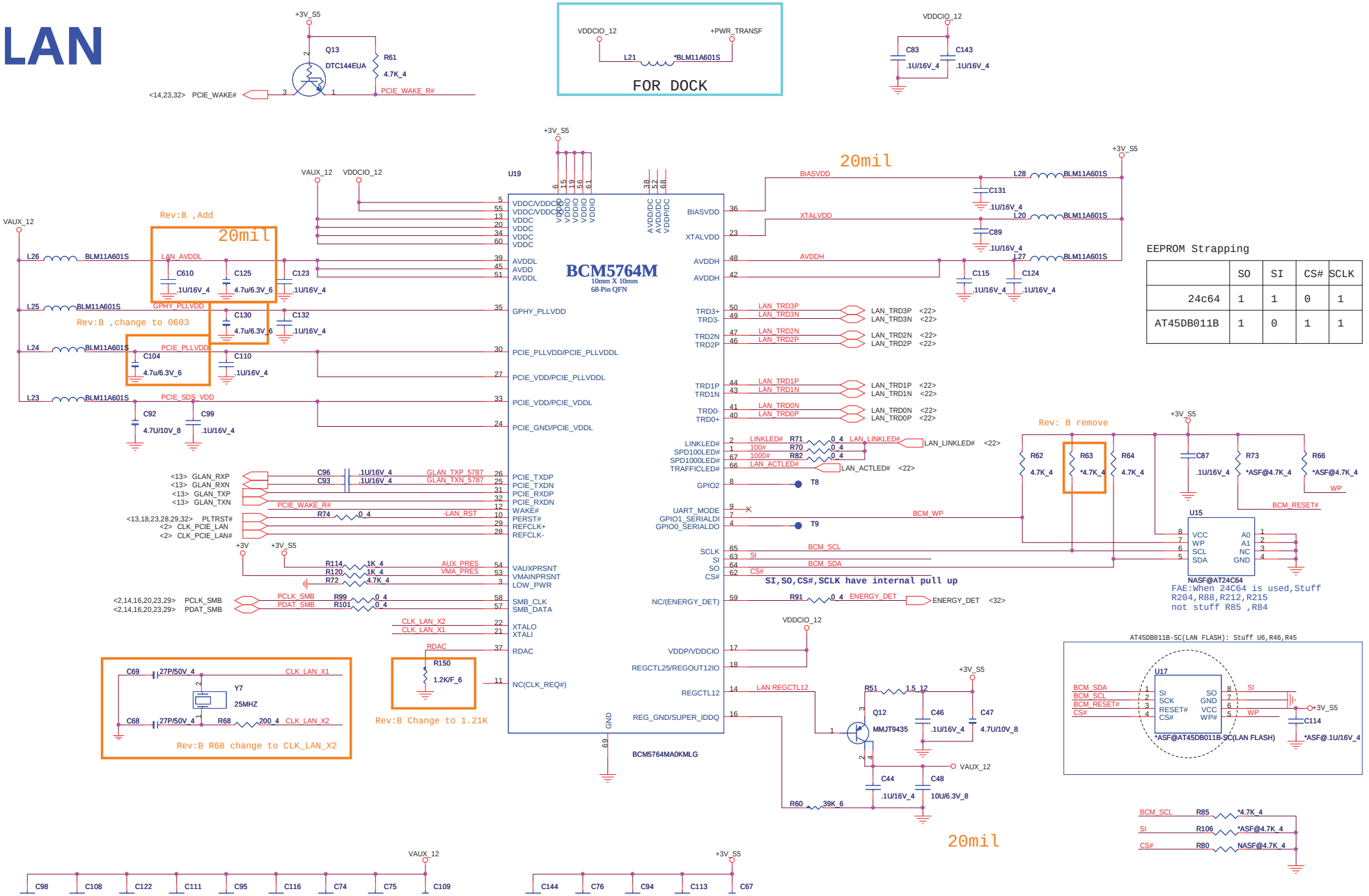

Quanta Computer Inc.

PROJECT : ZY2 & ZY6

Size	Document Number	Rev
	BCM5787 & 5764 LAN	1A

Date: Thursday, August 28, 2008 Sheet 21 of 40

PDF created with FinePrint pdfFactory Pro trial version http://www.fineprint.com

LAN SWITCH

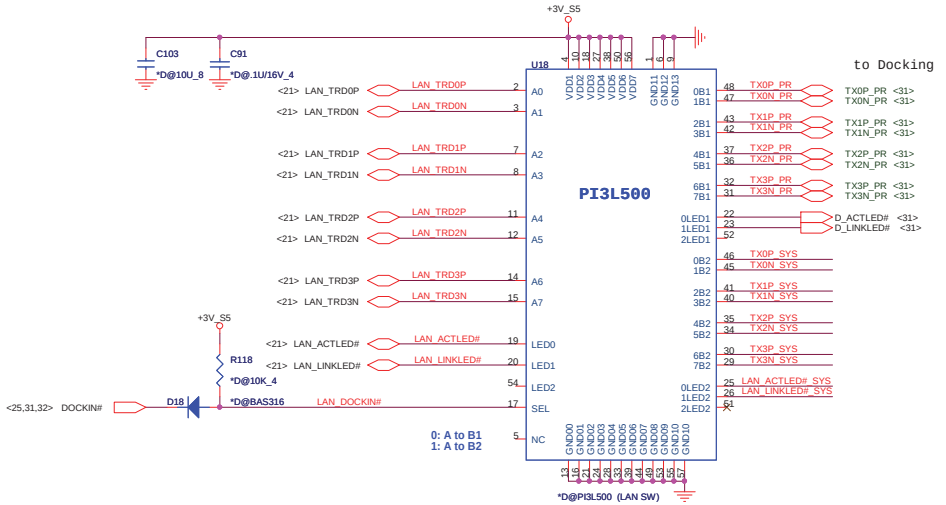

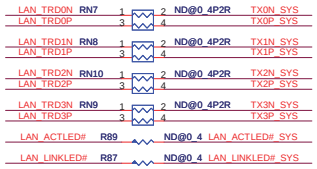

Transfomer

Source 1: DELTA LFE9249 DB0ZR1LAN11

Source 2: Bothand GST5009 DBKN1NLAN03

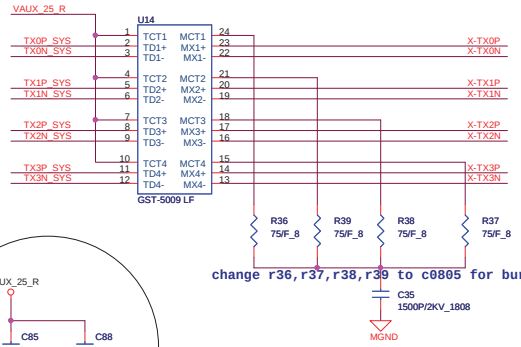

change r36,r37,r38,r39 to c0805 for burn out issue July 12th

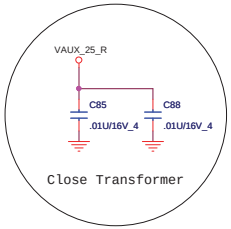

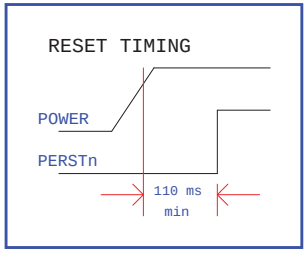

RJ45-11

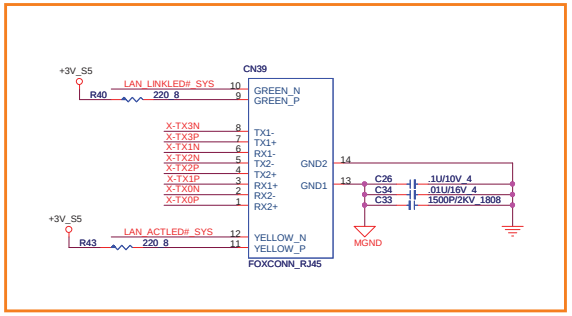

9/29: change footprint
11/27 :change footprint
11/28 : R43 & R40 Change to 0805
1/31 :Rev: C change PIN define about 9,10,11 & 12

BLUETOOTH MODULE CONNECTOR

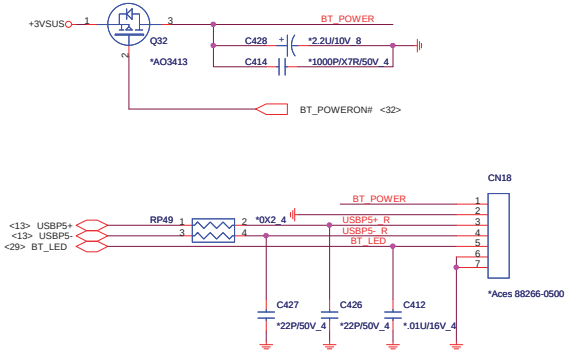

http://hobi-elektronika.net

Quanta Computer Inc.

PROJECT : ZY2 & ZY6

Size	Document Number	Rev
	BT/CCD/RJ45-11/CIR/2nd FAN	1A

Date: Thursday, August 28, 2008 Sheet 22 of 40

PDF created with FinePrint pdfFactory Pro trial version http://www.fineprint.com

MINI-CARD

MODULE 'A' TV card

MODULE 'B' Wireless card

Double Stack MINI CARD

Rev:B PIN36,38 Add USB3
PIN69 Add R536
PIN1, 53 Add R537 & R538

MODULE 'A' | MODULE 'B'

CN27

Pin	MODULE 'A'	MODULE 'B'	Pin
92	A_+3.3V	B_+3.3V	52
71	A_+3.3Vaux	B_+3.3Vaux	24
54	A_+3.3V	B_+3.3V	2
87	A_LED_WPAN#	B_LED_WPAN#	46
85	A_LED_WLAN#	B_LED_WLAN#	44
83	A_LED_WWAN#	B_LED_WWAN#	42
80	A_USB_D+	B_USB_D+	38
78	A_USB_D-	B_USB_D-	36
76	A_SMB_DATA	B_SMB_DATA	32
74	A_SMB_CLK	B_SMB_CLK	30
33	A_PETp0	B_PETp0	77
31	A_PETn0	B_PETn0	75
25	A_PERp0	B_PERp0	72
23	A_PERn0	B_PERn0	70
69	A_PERST#	B_PERST#	22
13	A_REFCLK+	B_REFCLK+	63
11	A_REFCLK-	B_REFCLK-	61
7	A_CLKREQ#	B_CLKREQ#	58
1	A_WAKE#	B_WAKE#	53
89	A_+1.5V	B_+1.5V	48
73	A_+1.5V	B_+1.5V	28
57	A_+1.5V	B_+1.5V	6
65	A_LFRAME# R	B_LFRAME# R	16
64	A_LAD3 R	B_LAD3 R	14
62	A_LAD2 R	B_LAD2 R	12
60	A_LAD1 R	B_LAD1 R	10
59	A_LAD0 R	B_LAD0 R	8
51	NC	NC	91
49	C-Link_RST	C-Link_RST	90
47	C-Link_DAT	C-Link_DAT	88
45	C-Link_CLK	C-Link_CLK	86
41	NC	NC	82
39	NC	NC	81
19	NC	NC	67
17	NC	NC	66
68	A_W_DISABLE#	B_W_DISABLE#	20
5	A_BT_CHCLK	B_BT_CHCLK	56
3	A_BT_DATA	B_BT_DATA	55
43	GND	GND	84
37	GND	GND	79
26	GND	GND	50
21	GND	GND	40
18	GND	GND	35
15	GND	GND	34
9	GND	GND	29
4	GND	GND	27
93	GND	GND	94

+3V R542 *0_8 +3V_MINI_A
+3V_MINI_B R543 0_8 +3V

RF_LED# R536 *0_4 RF_LED# A
RF_LED# B R447 0_4 RF_LED# RF_LED# <29>

<13> USBP2+ USBP2+ RP27 3 4 *0X2_4 USBP2+ C
<13> USBP2- USBP2- 1 2 USBP2- C
USBP3+ C RP57 2 1 0X2_4 USBP3+ USBP3+ <13>
USBP3- C 4 3 USBP3- USBP3- <13>
MINI_SMDATA
MINI_SMCLK

<13> PCIE_TXP2 PCIE_TXP2
<13> PCIE_TXN2 PCIE_TXN2
<13> PCIE_RXP2 PCIE_RXP2
<13> PCIE_RXN2 PCIE_RXN2
PLTRST#
<2> CLK_PCIE_TV CLK_PCIE_TV
<2> CLK_PCIE_TV# CLK_PCIE_TV#

PCIE_TXP4 <13>
PCIE_TXN4 <13>
PCIE_RXP4 <13>
PCIE_RXN4 <13>
PLTRST# <13,18,21,28,29,32>
CLK_PCIE_MINI1 <2>
CLK_PCIE_MINI1# <2>

PCIE_WAKE# R R538 *0_4 PCIE_WAKE# R A
PCIE_WAKE# R B R537 *0_4 PCIE_WAKE# R

+1.5V +1.5V

<12,32> LFRAME# R445 *0_4 A_LFRAME# R
<12,32> LAD3 R444 *0_4 A_LAD3 R
<12,32> LAD2 R443 *0_4 A_LAD2 R
<12,32> LAD1 R442 *0_4 A_LAD1 R
<12,32> LAD0 R441 *0_4 A_LAD0 R

B_LFRAME# R R561 0_4 LFRAME#
B_LAD3 R R559 0_4 LAD3
B_LAD2 R R558 0_4 LAD2
B_LAD1 R R560 0_4 LAD1
B_LAD0 R R562 0_4 LAD0

Debug

<13,27> PCIRST# R450 *0_4
<2> PCLK_DEBUG R448 *0_4

+3V R446 *SP@0_6 +3V_MINI_R
TV use +3V
C510 .1U/16V_4

RF_EN R557 *0_4 A_RF_EN
B_RF_EN R556 0_4 RF_EN <32>

+5V L41 *SP@FBJ3216HS800_12 +5V_TV-CARD
500mA, 25mil
C494 4.7U/6.3V_6
C493 .1U/16V_4

FOR R446 & L41	
LOW COST	N
TM & AS	Y

A/B MODULE Share pin

SP@ single QUASAR-CA0404-071N21_92P

LC@ LOW COST 瑜ㄅ

+3V_S5 for WWAN card is 2.75A

+3V
C513 4.7U/6.3V_6
C499 4.7U/6.3V_6
C491 .1U/16V_4
C498 .1U/16V_4

+1.5V
C512 .1U/16V_4
C317 .1U/16V_4
C500 10U/6.3V_8

+3V
R449 10K_4
<2,14,16,20,21,29> PCLK_SMB 3 Q35 1 MINI_SMCLK
2N7002

+3V
R451 10K_4
<2,14,16,20,21,29> PDAT_SMB 3 Q36 1 MINI_SMDATA
2N7002

+3VSUS
Q34 *DTC144EUA
<14,21,32> PCIE_WAKE# 3 1 PCIE_WAKE# R

FOR EMI

+5V C605 1U/10V_4
VCC_CORE C70 1U/10V_4
VIN C150 1U/25V_6 +3V_S5
+3V C613 .1U/16V_4
+1.05V C614 .1U/16V_4

INVCC0 C607 1U/25V_6
+VDR_SUS C273 1U/10V_4
+VDR_SUS C394 1U/10V_4
+1.8V C615 .1U/16V_4

Quanta Computer Inc.
PROJECT : ZY2 & ZY6

Size	Document Number	Rev
	MINI PCI-E card/TV/TPM	1A
Date: Tuesday, August 12, 2008	Sheet 23 of 40	

http://hobi-elektronika.net

PDF created with FinePrint pdfFactory Pro trial version http://www.fineprint.com

SATA HDD

11/8 REV:B Conn. 奔癸秸 CN28 & CN19

Main

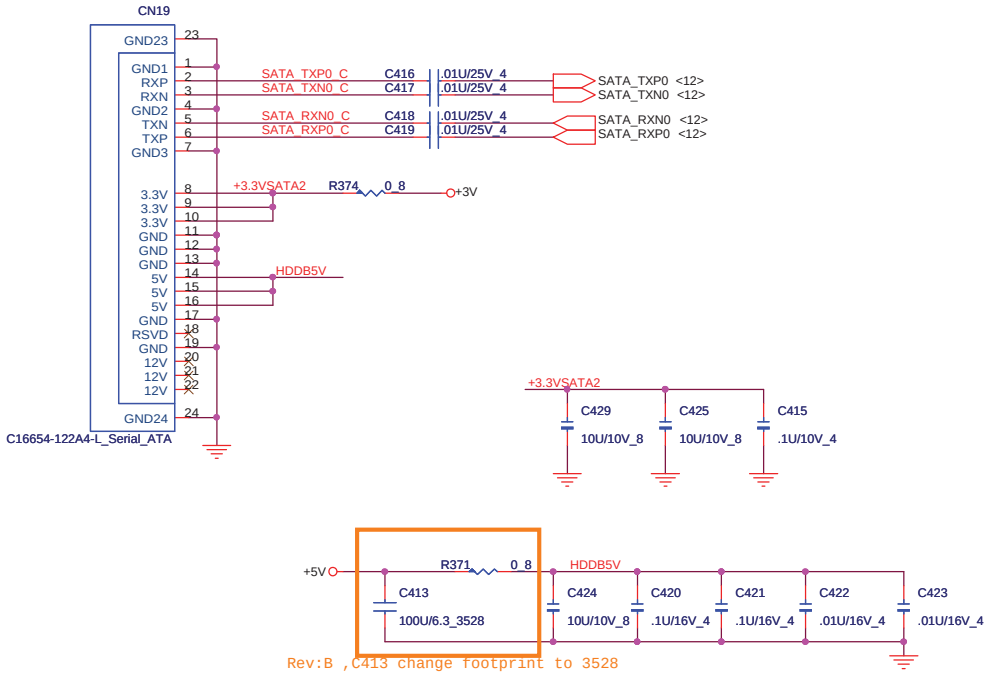

Rev:B ,C413 change footprint to 3528

2ND SATA HDD

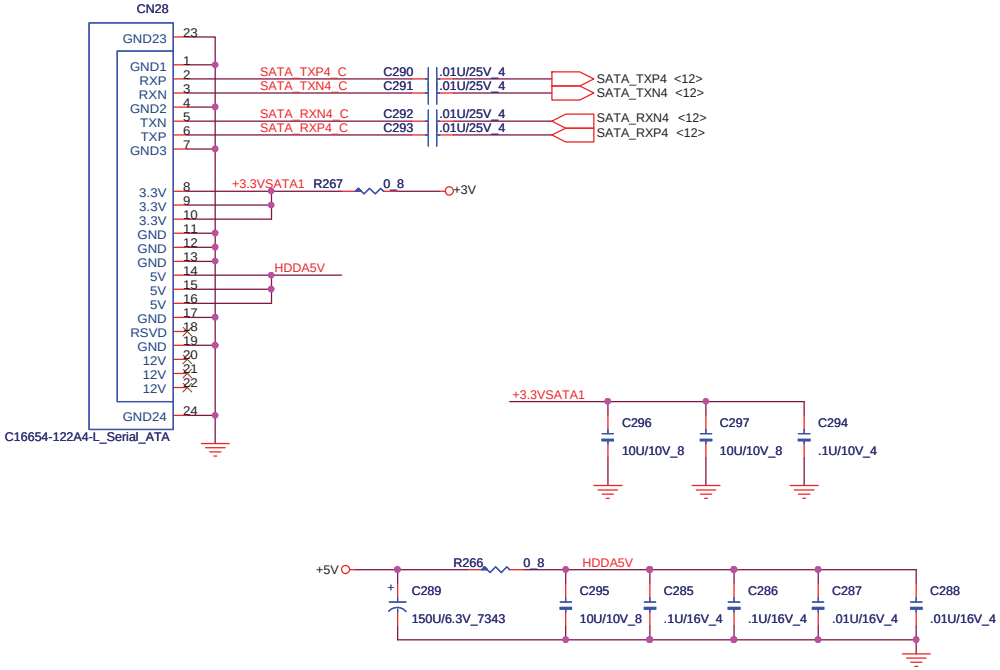

ODD (SATA)

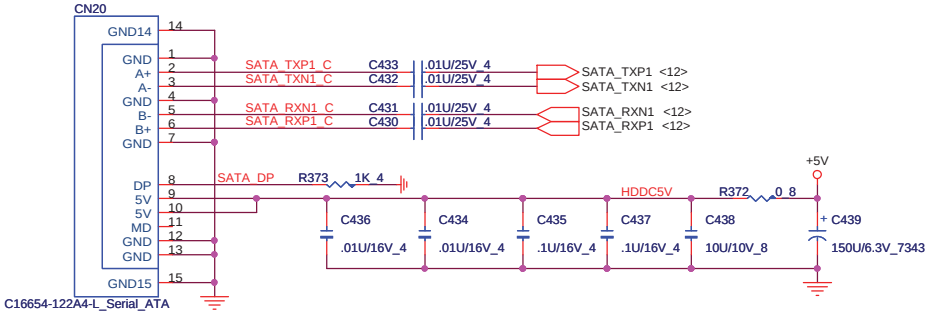

http://hobi-elektronika.net

Quanta Computer Inc.

PROJECT : ZY2 & ZY6

Size	Document Number	Rev
	SATA-HDD & ODD	1A

Date: Wednesday, August 13, 2008 Sheet 24 of 40

PDF created with FinePrint pdfFactory Pro trial version http://www.fineprint.com

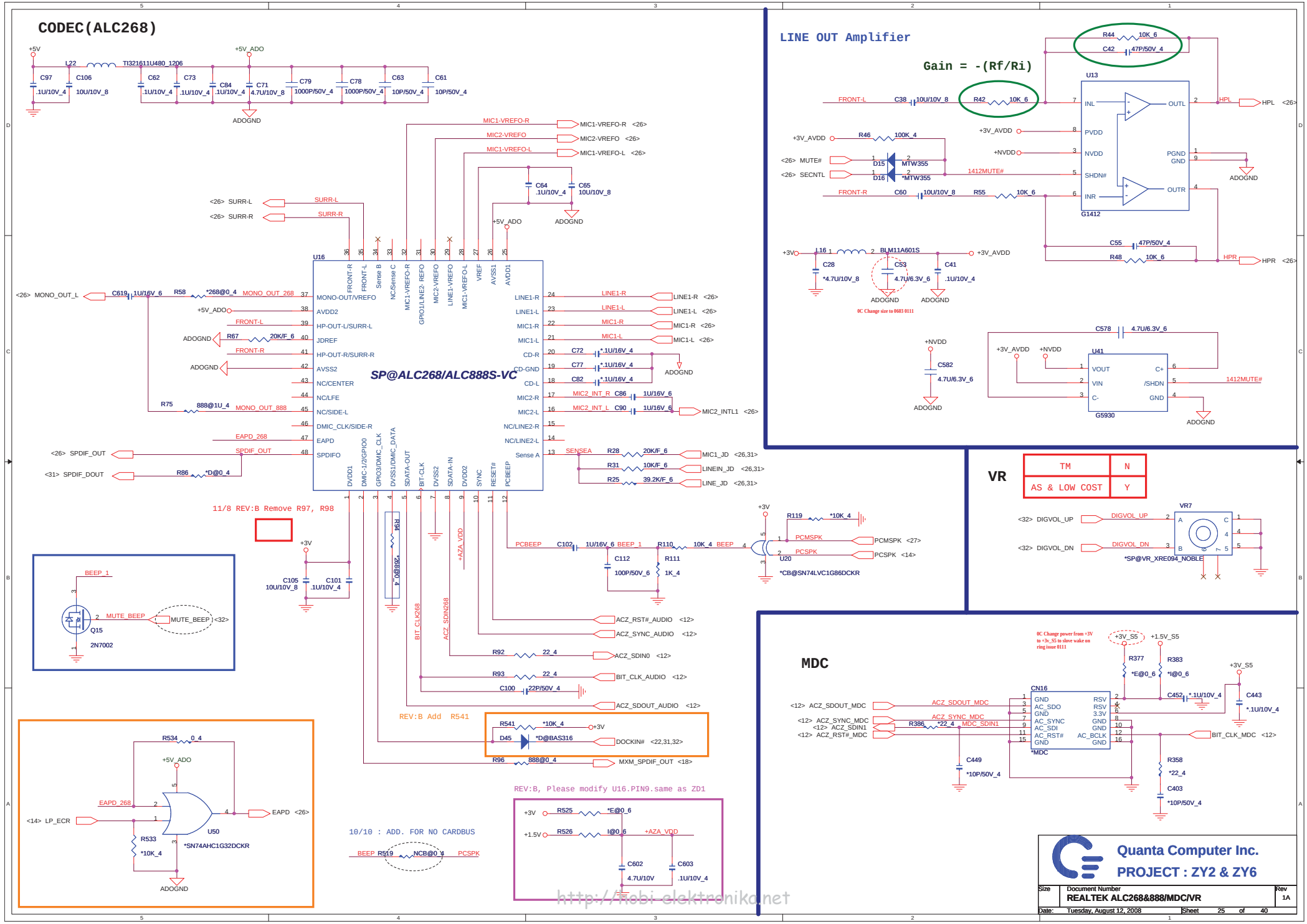

PDF created with FinePrint pdfFactory Pro trial version http://www.fineprint.com

Speaker Amplifier

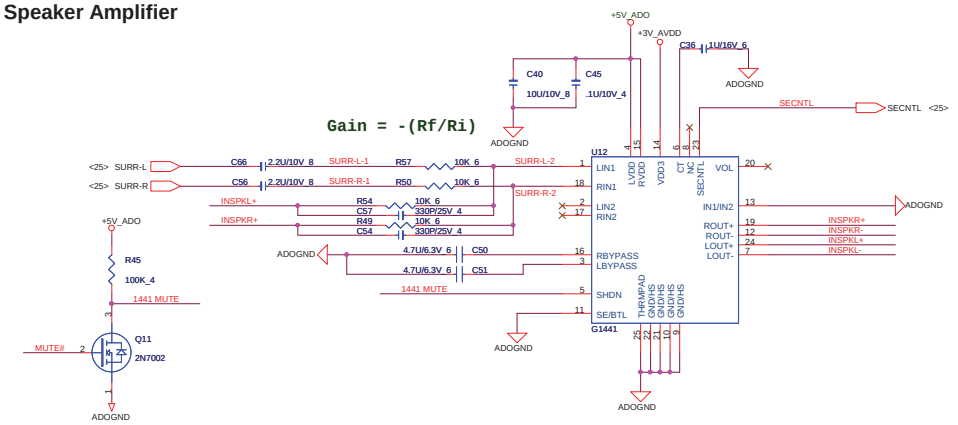

EC MUTE

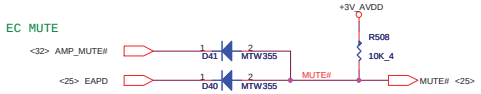

SPEAKER

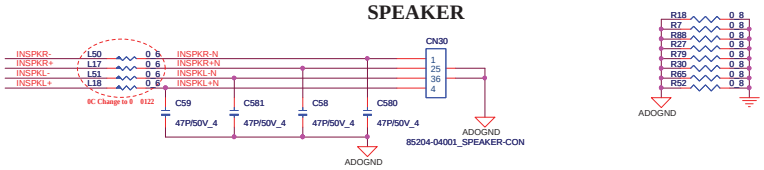

SYSTEM LINE OUT/SPDIF

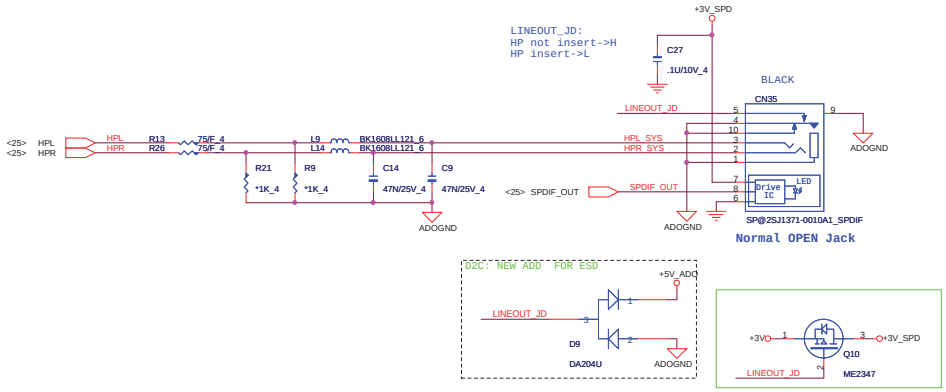

Foxconn DFTJ10FR470 2FB5441-BKMC-7F
Singatron DFTJ10FR437 2SJ1371-0010A1

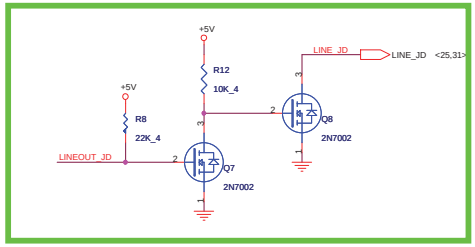

Docking LINE OUT/SPDIF

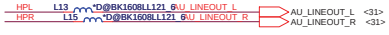

SYSTEM LINE IN/SUBWOOFER

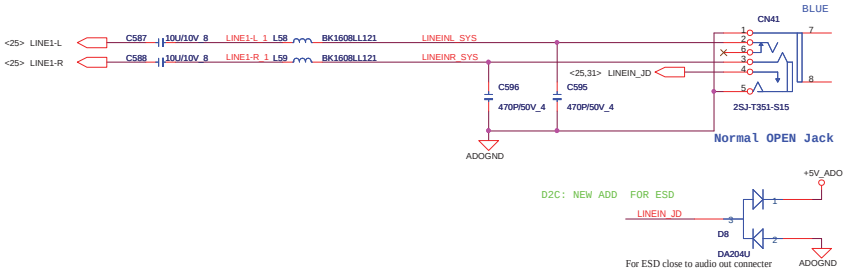

Singatron DFTJ06FR732 2SJ-T351-S15
Foxconn DFTJ06FRA21 JA6233L-U3T4-7F
Alltop DFTJ06FR902 C12107-906A9-L

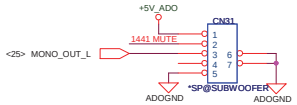

TM & LOW COST	N
AS	Y

Docking LINE IN

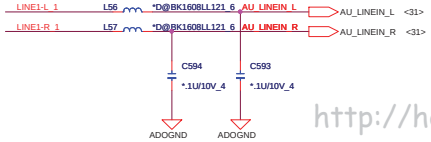

MIC

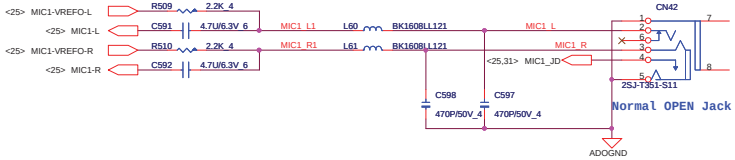

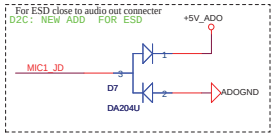

Singatron DFTJ06FR741 2SJ-T351-S11
Foxconn DFTJ06FRA39 JA6233L-P3T4-7F
Alltop DFTJ06FR899 C12107-D06A9-L

INT MIC array

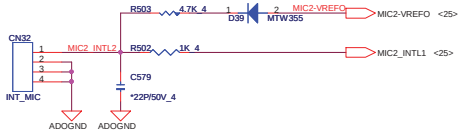

Quanta Computer Inc.
PROJECT : ZY2 & ZY6

Size	Document Number	Rev
	AMP /AUDIO JACK CONN	1A

Date: Thursday, August 28, 2008 Sheet 26 of 40

http://hobi-elektronika.net

PDF created with FinePrint pdfFactory Pro trial version http://www.fineprint.com

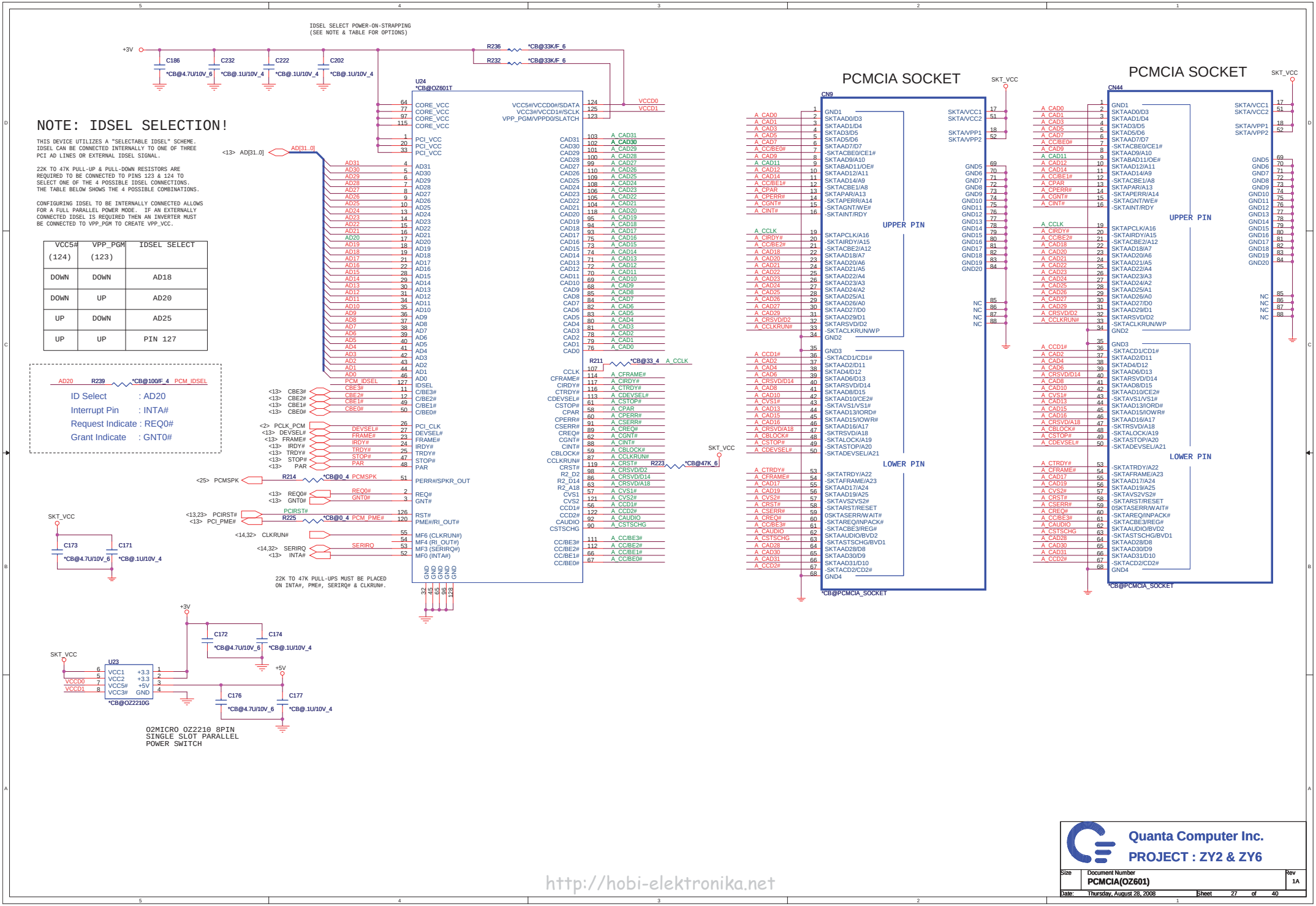

http://hobi-elektronika.net

PDF created with FinePrint pdfFactory Pro trial version http://www.fineprint.com

7 IN 1 CARD READER

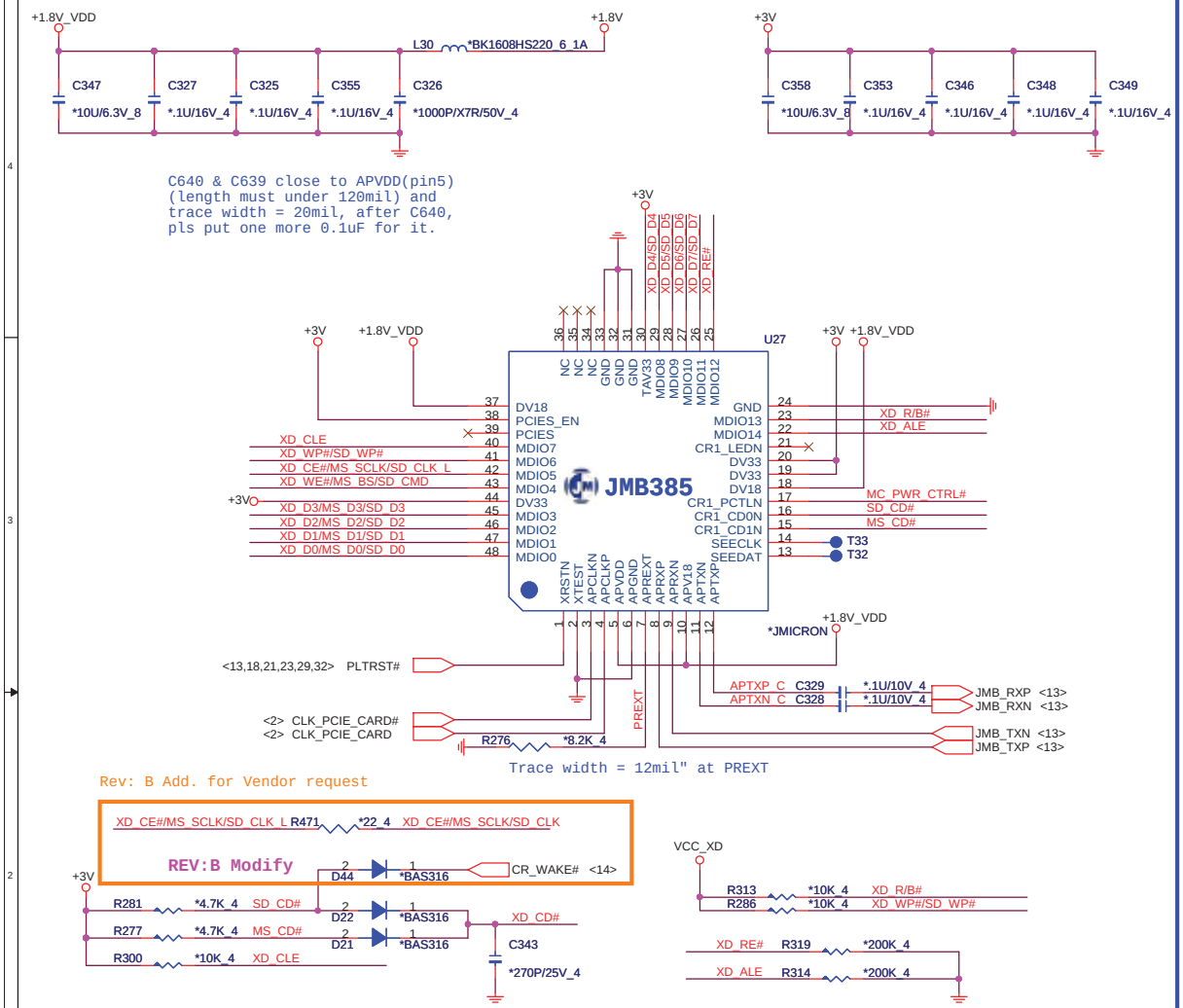

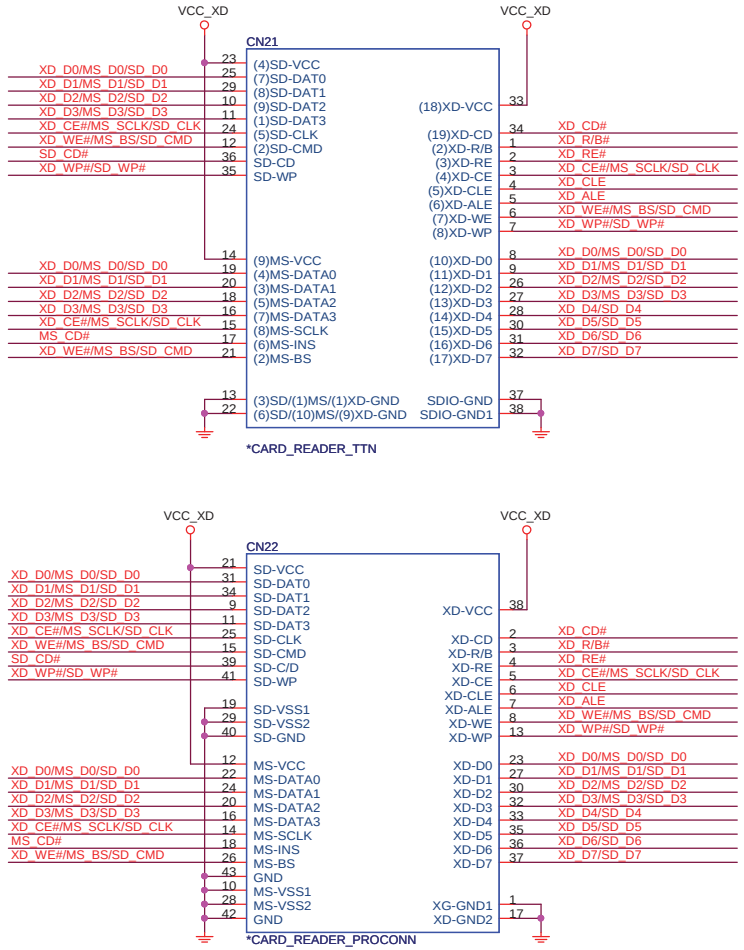

Memory Card Power Supply

10/12 : BOM modify

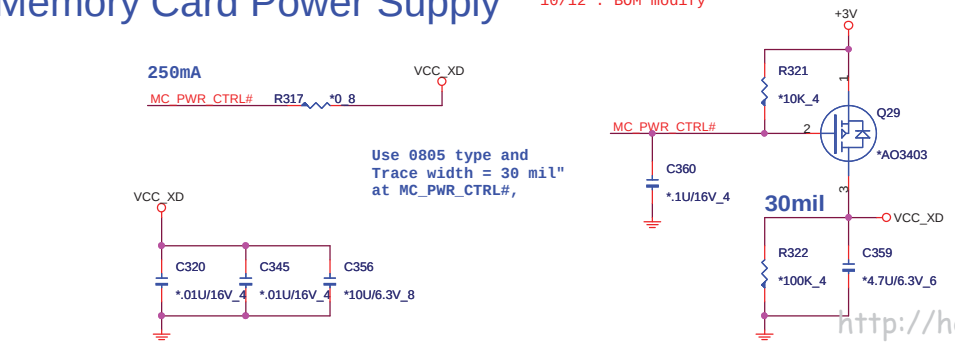

http://hobi-elektronika.net

Quanta Computer Inc.		
PROJECT : ZY2 & ZY6		
Size	Document Number: CARD READER JMB385	Rev 1A
Date: Thursday, August 28, 2008	Sheet 28 of 40	

PDF created with FinePrint pdfFactory Pro trial version http://www.fineprint.com

To NEW-CARD & EXT. USB

REV:B, CN10 change footprint

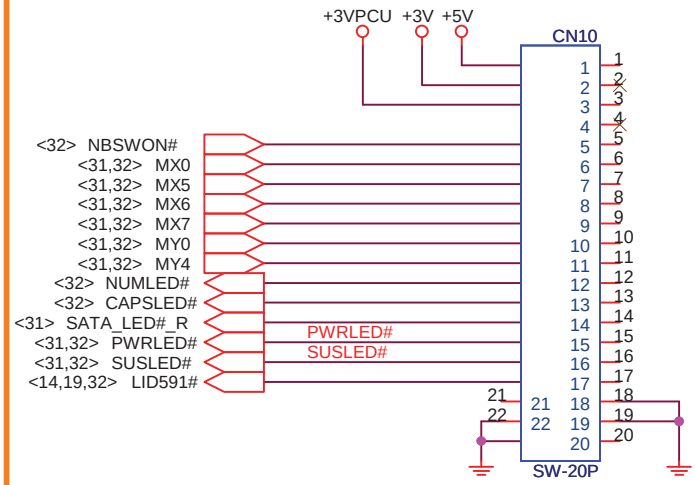

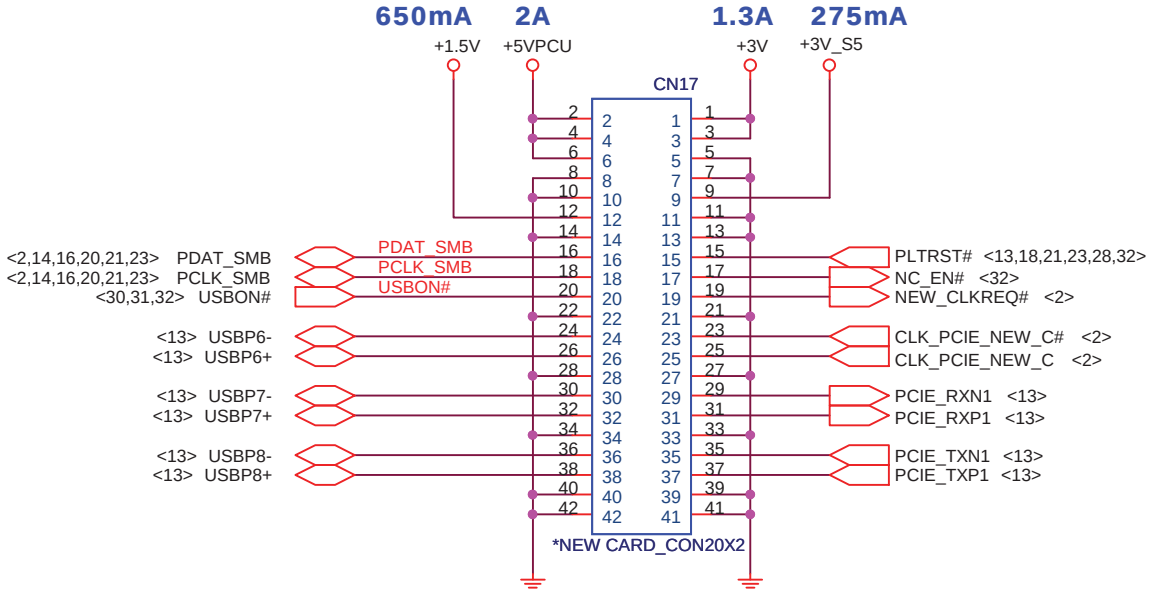

REV:B, Please change PIN define.same as ZY5
CN8 change footprint

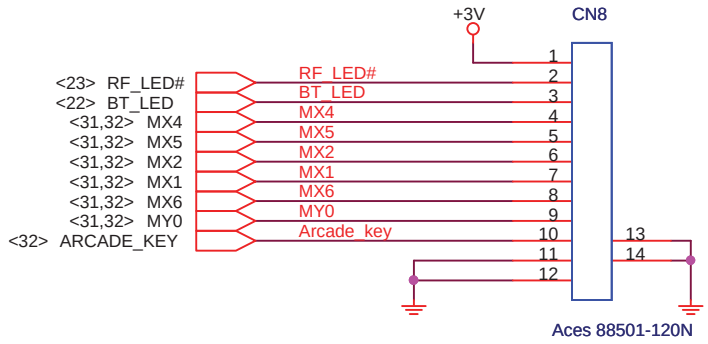

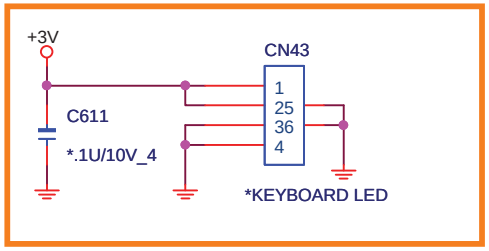

Rev:B Add CN43 For backlight KB

Fnction	Keyboard Matrix
E-KEY	MX0/ MY0
E-Mail	MX1/ MY0
E-WWW	MX2/ MY0
3G/TV	MX3/ MY0
Wireless	MX4/ MY0
BlueTooth	MX5/ MY0
P-KEY	MX6/ MY0
Presentation	MX5/ MY4
Lock	MX6/ MY4
Sync	MX7/ MY4

Rev:B Change to 蛾 to よPAD
C255,C234,C221,C199,R217,C198,R183,
R182,R174,R257,R324,R335,R334,R349,C395

http://hobi-elektronika.net

Quanta Computer Inc.

PROJECT : ZY2 & ZY6

Size	Document Number	Rev
	BTB CONN.	1A

Date: Tuesday, August 12, 2008 Sheet 29 of 40

PDF created with FinePrint pdfFactory Pro trial version http://www.fineprint.com

Finger Printer

TM & AS	Y
LOW COST	N

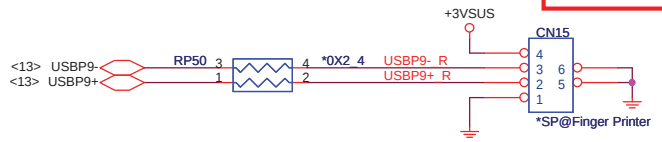

USB

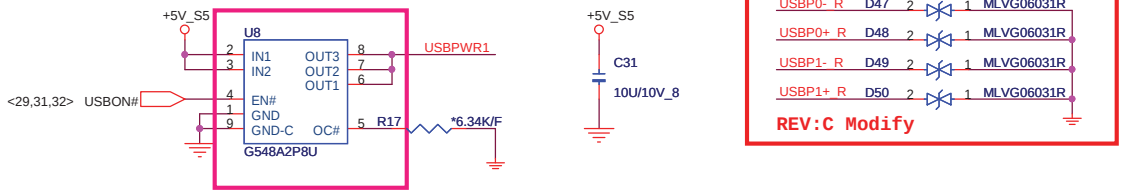

10/16: Change BOM

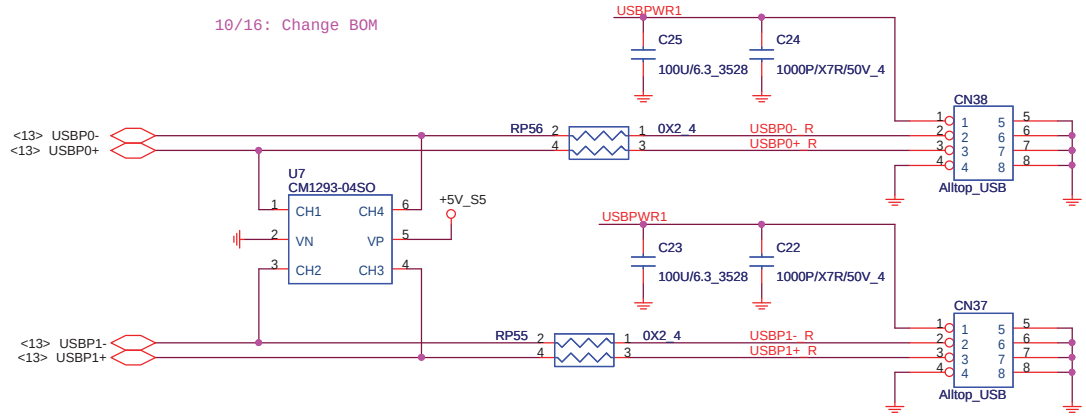

HOLES

CPU NUT (BOT)

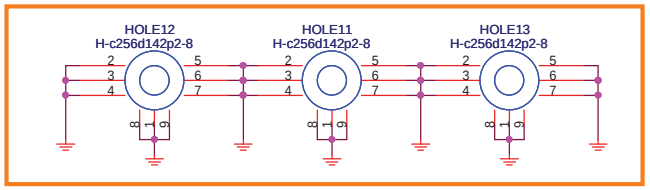

Rev : B Add MINI NUT

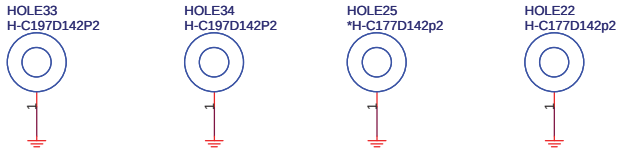

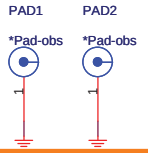

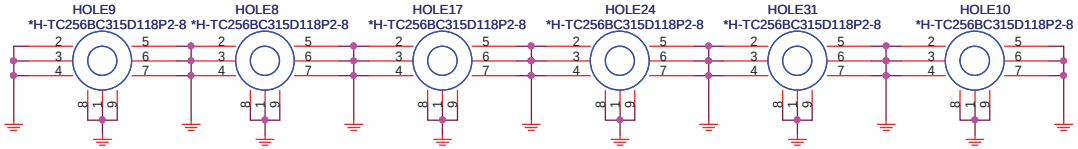

MXM NUT (BOT)

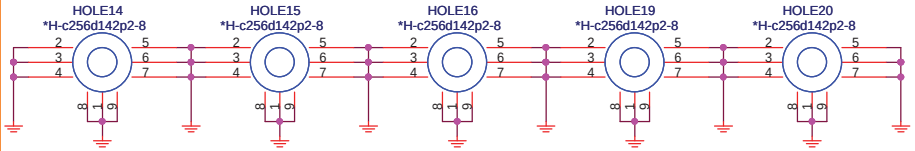

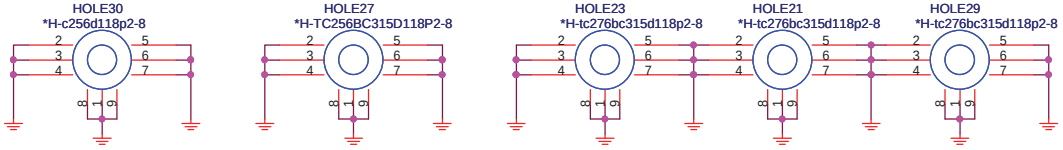

MDC NUT (TOP)

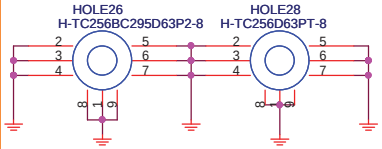

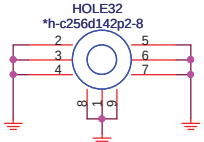

Rev:B New add HOLE32
HOLE26 & 28 Change footprint

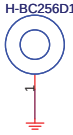

HOLE35 璶穐 BOT

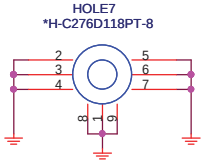

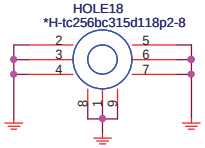

http://hobi-elektronika.net

Quanta Computer Inc.
PROJECT : ZY2 & ZY6

Size	Document Number	Rev
	USB/FINGER PRINTER	1A
Date: Tuesday, August 12, 2008	Sheet 30 of 40	

PDF created with FinePrint pdfFactory Pro trial version http://www.fineprint.com

INT K/B

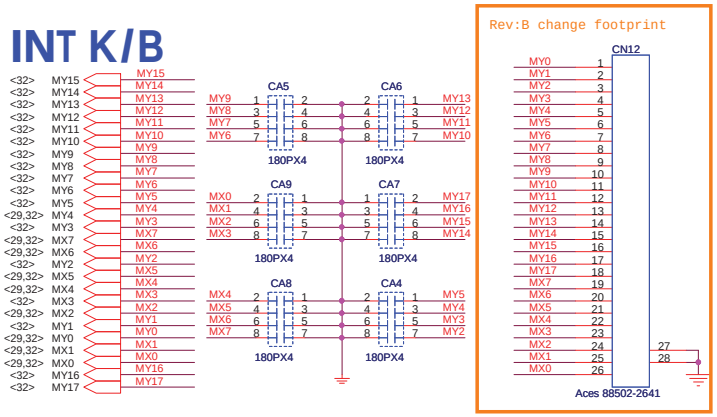

CPU FAN

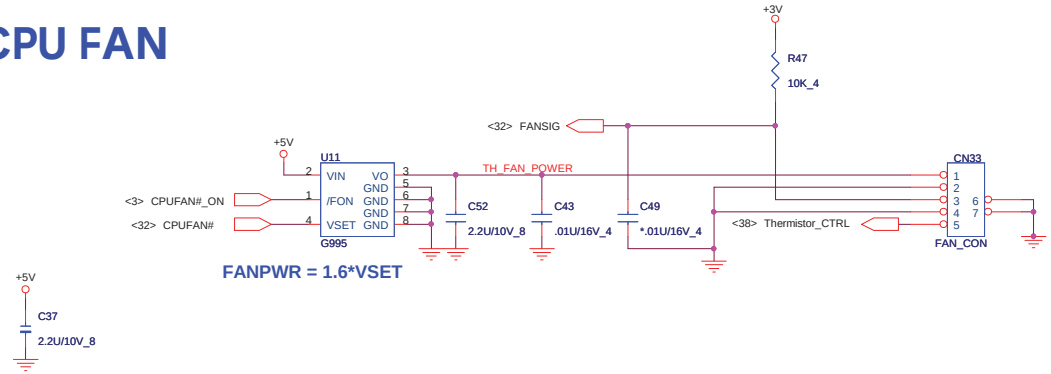

LED

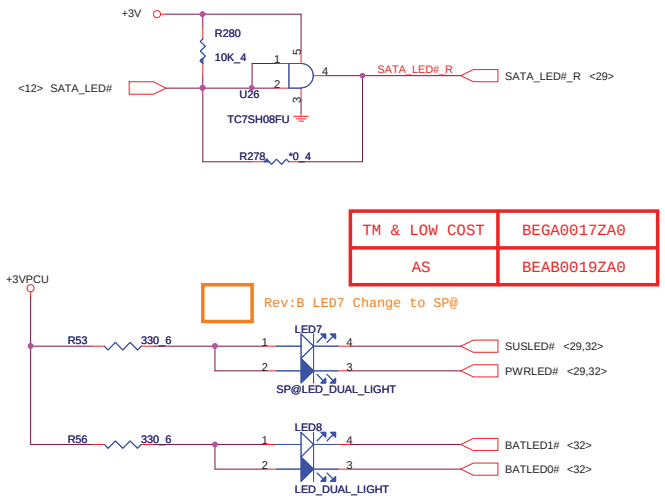

CABLE DOCK

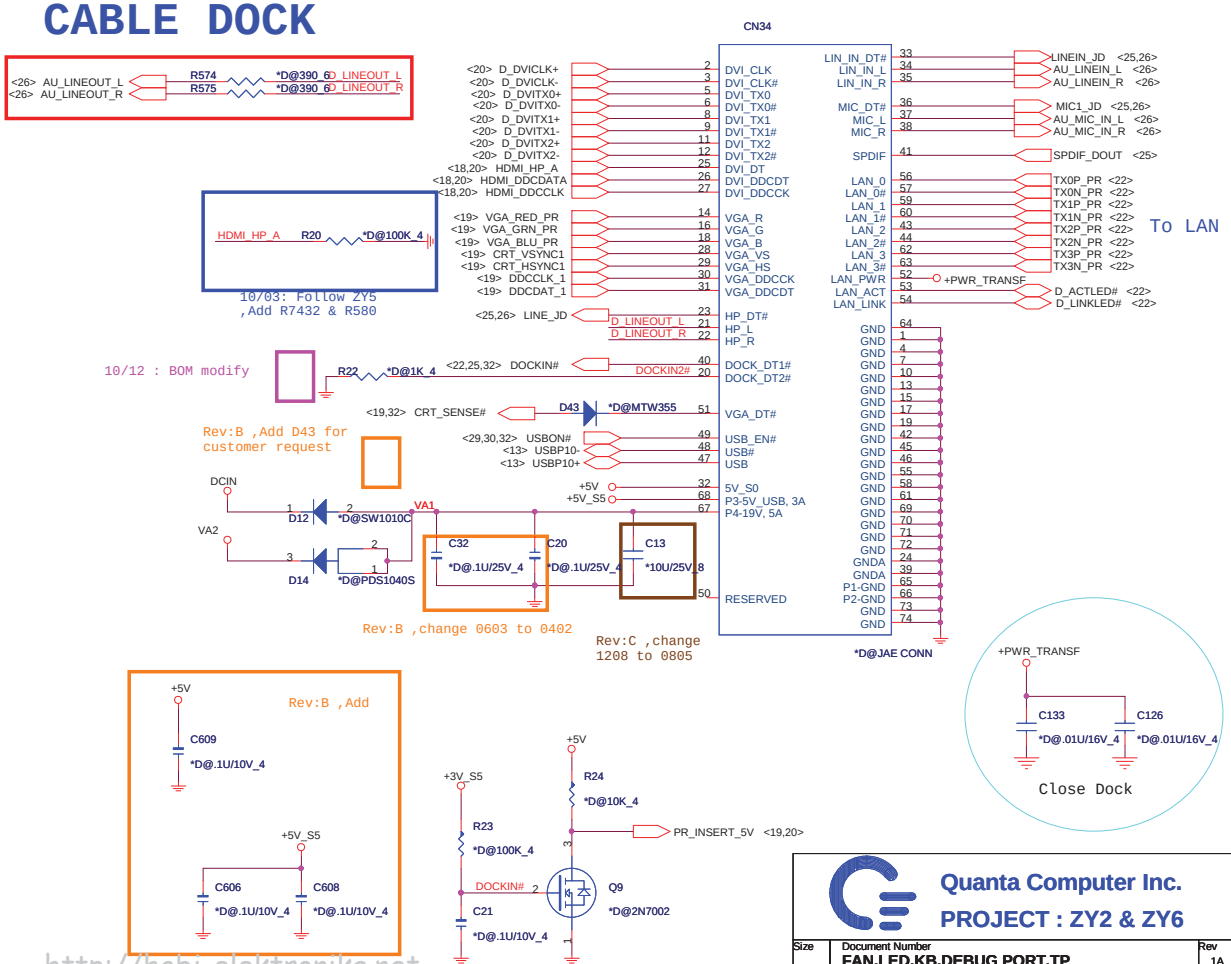

T/P

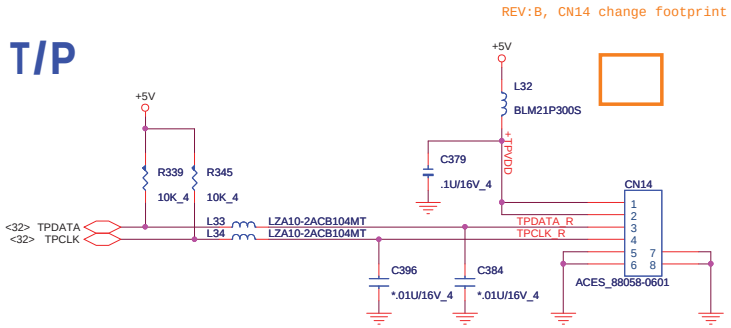

http://hobi-elektronika.net

Quanta Computer Inc.

PROJECT : ZY2 & ZY6

Size	Document Number	Rev
	FAN,LED,KB,DEBUG PORT,TP	1A

Date: Tuesday, August 12, 2008 Sheet 31 of 40

PDF created with FinePrint pdfFactory Pro trial version http://www.fineprint.com

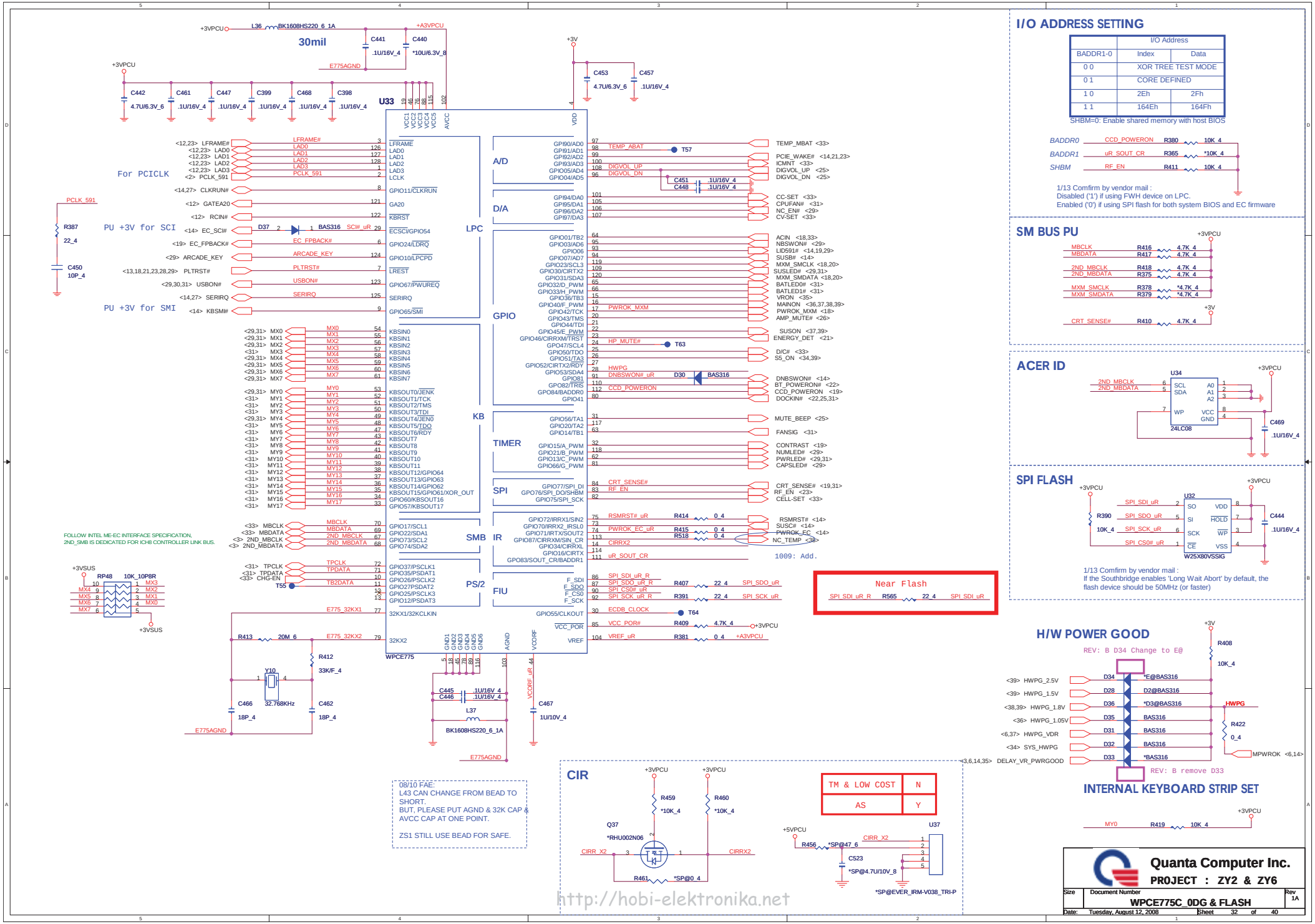

PDF created with FinePrint pdfFactory Pro trial version http://www.fineprint.com

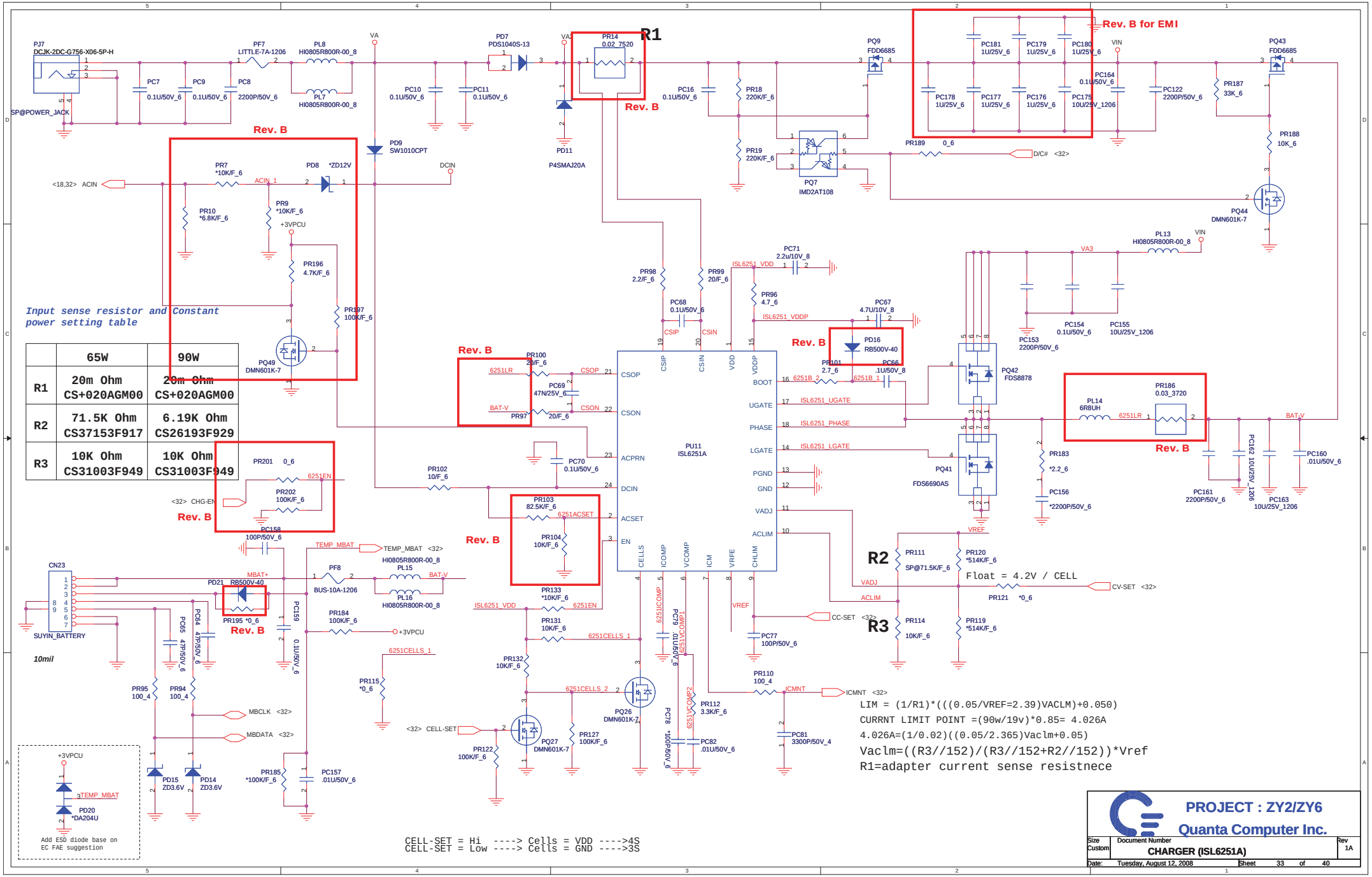

	65W	90W
R1	20m Ohm CS+020AGM00	20m Ohm CS+020AGM00
R2	71.5K Ohm CS37153F917	6.19K Ohm CS26193F929
R3	10K Ohm CS31003F949	10K Ohm CS31003F949

http://hobi-elektronika.net

PDF created with FinePrint pdfFactory Pro trial version http://www.fineprint.com

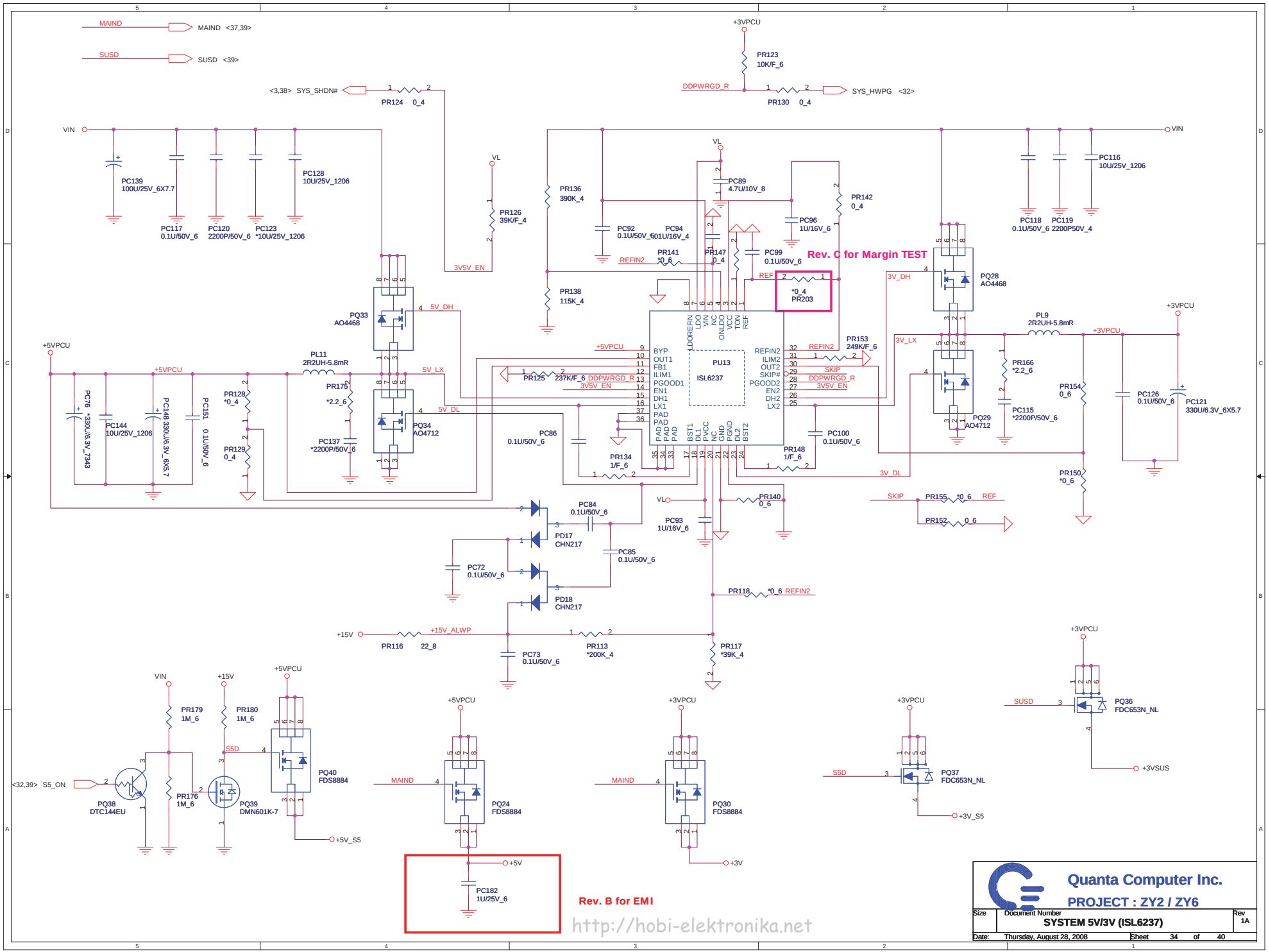

PDF created with FinePrint pdfFactory Pro trial version http://www.fineprint.com

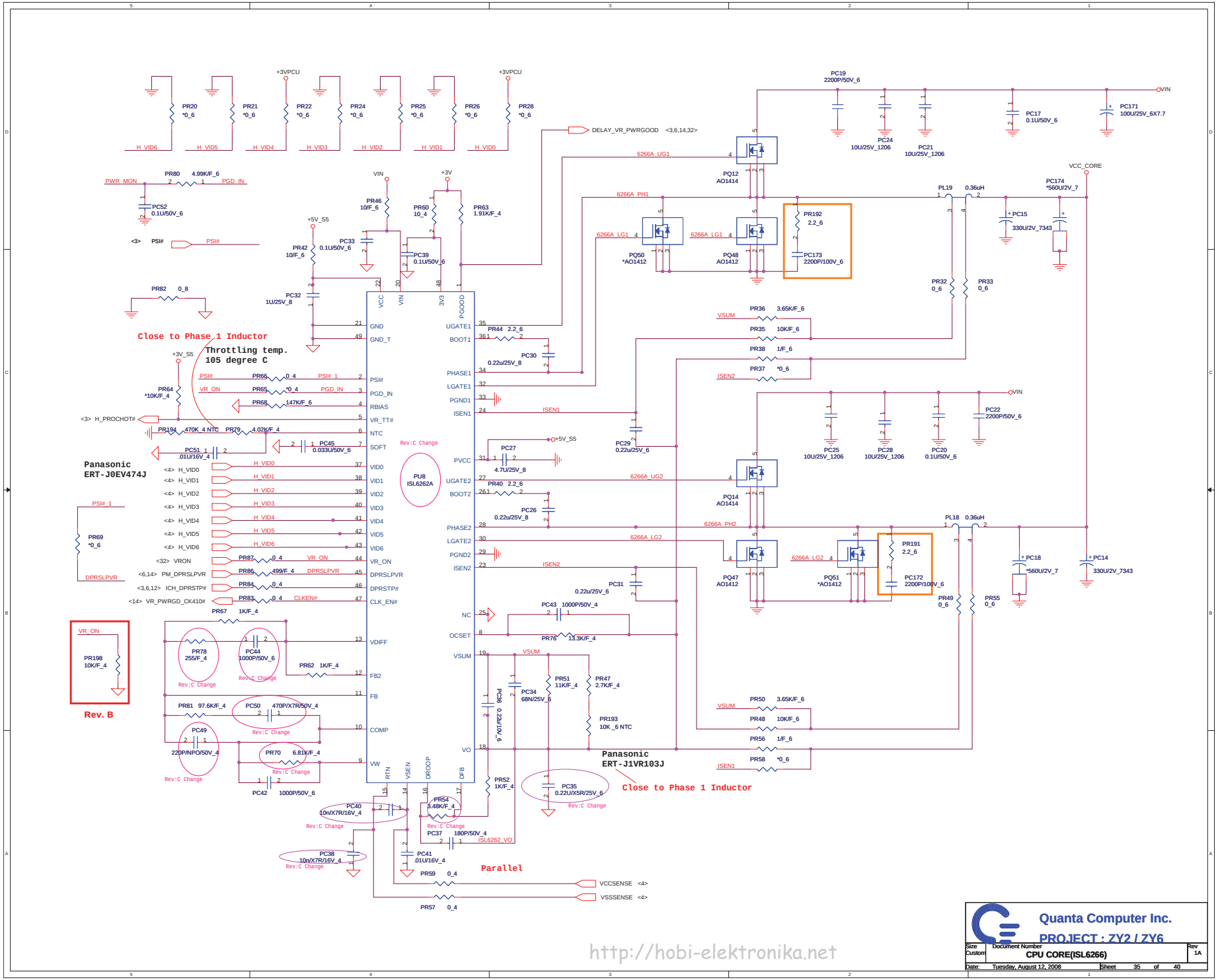

http://hobi-elektronika.net

PDF created with FinePrint pdfFactory Pro trial version http://www.fineprint.com

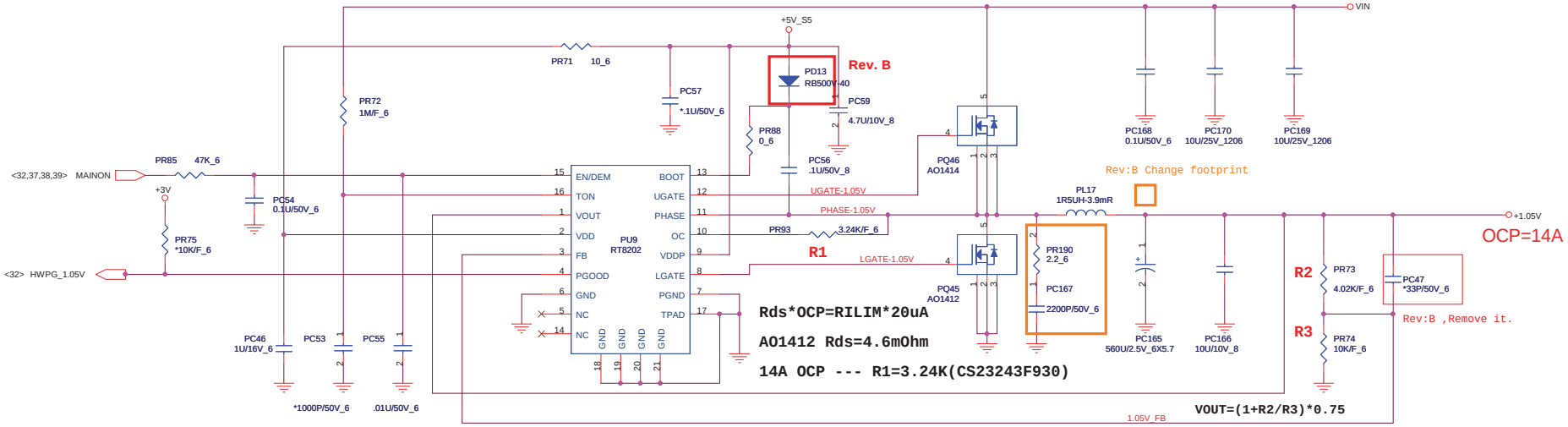

TON=3.85p*RTON*Vout/(Vin-0.5)

Frequency=Vout/(Vin*TON)

Quanta Computer Inc.

PROJECT : ZY2 / ZY6

Size	Document Number	Rev
	VTT 1.05V (RT8202)	1A

Date: Tuesday, August 12, 2008 Sheet 36 of 40

http://hobi-elektronika.net

PDF created with FinePrint pdfFactory Pro trial version http://www.fineprint.com

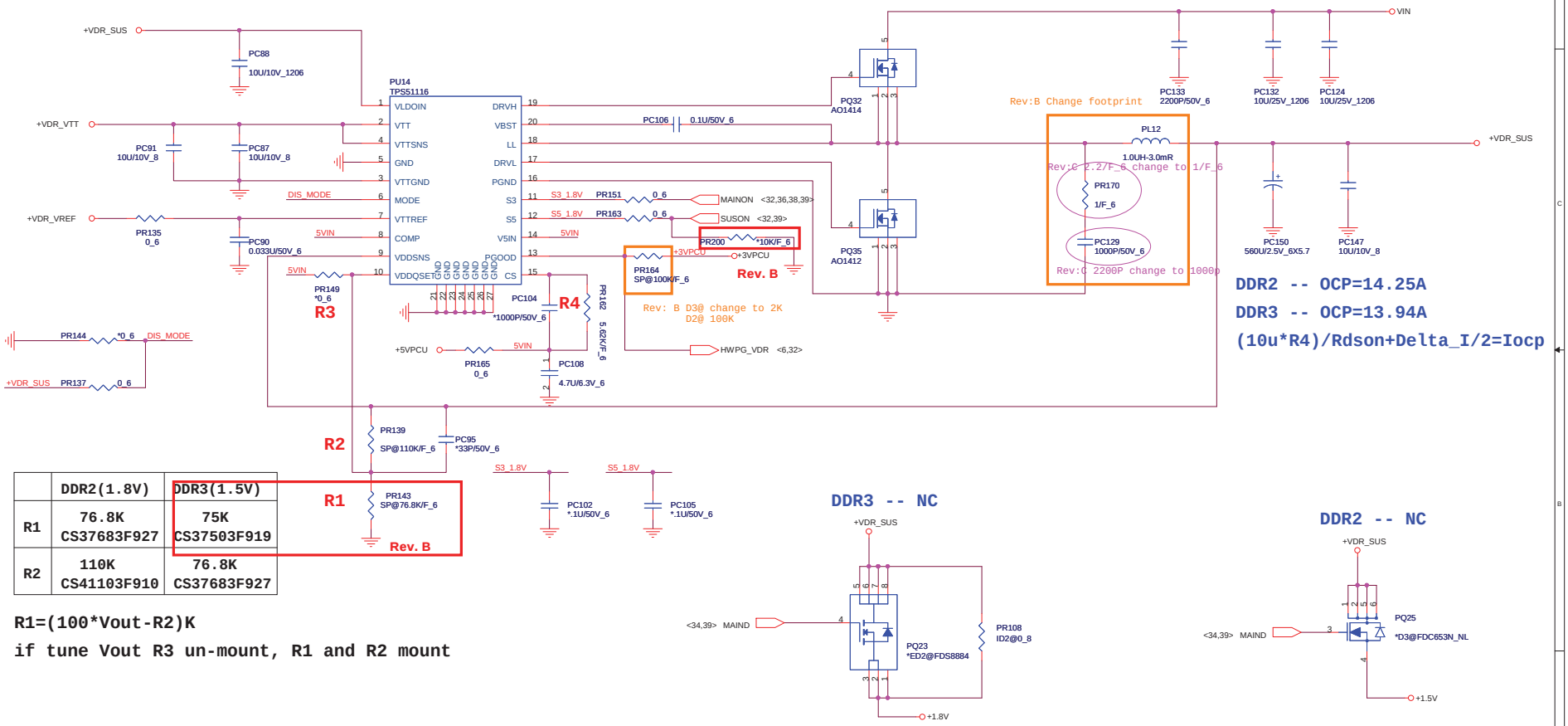

	DDR2(1.8V)	DDR3(1.5V)
R1	76.8K CS37683F927	75K CS37503F919
R2	110K CS41103F910	76.8K CS37683F927

R1=(100*Vout-R2)K

if tune Vout R3 un-mount, R1 and R2 mount

Quanta Computer Inc.

PROJECT : ZY2 / ZY6

Size	Document Number	Rev
	VDR (TPS51116)	1A

Date: Tuesday, August 12, 2008 Sheet 37 of 40

http://hobi-elektronika.net

PDF created with FinePrint pdfFactory Pro trial version http://www.fineprint.com

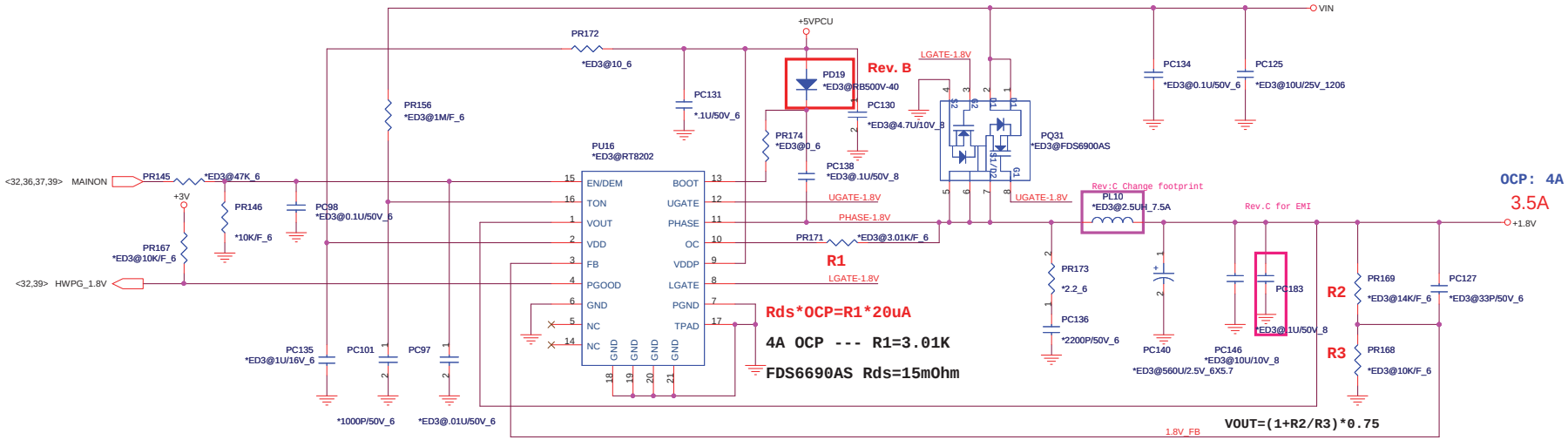

TON=3.85p*RTON*Vout/(Vin-0.5)

Frequency=Vout/(Vin*TON)

thermal protection --0928

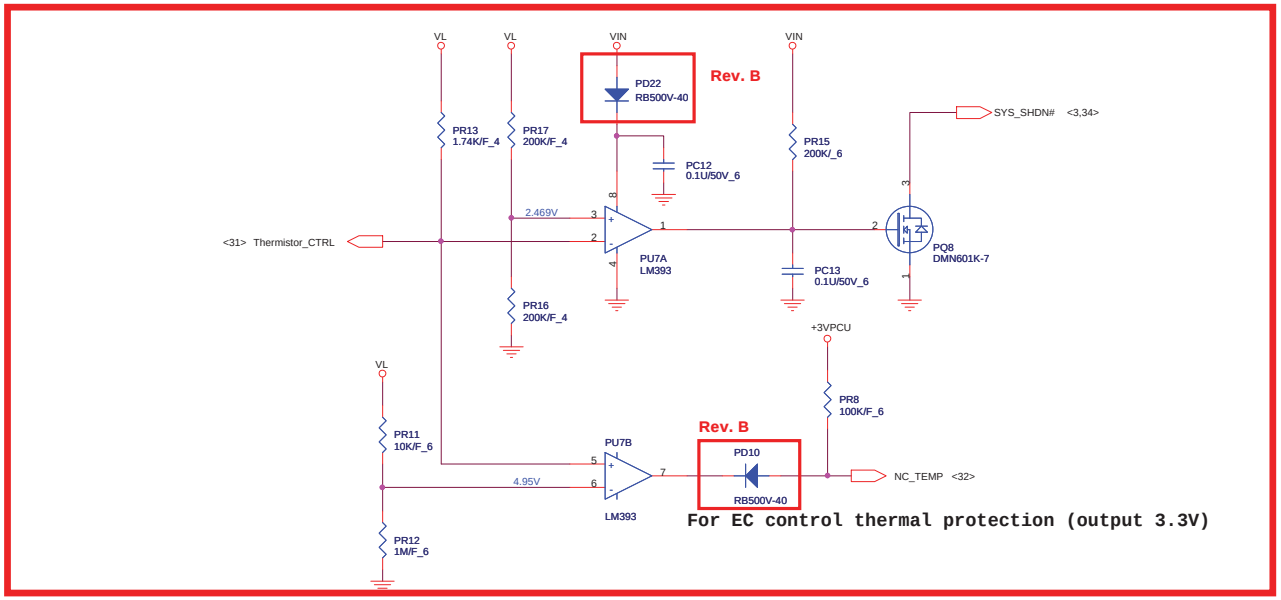

Quanta Computer Inc.

PROJECT : ZY2 / ZY6

Size	Document Number	Rev
	1.8V (RT8202)	1A

Date: Tuesday, August 12, 2008 Sheet 38 of 40

http://hobi-elektronika.net

PDF created with FinePrint pdfFactory Pro trial version http://www.fineprint.com

for DDR3 and UMA

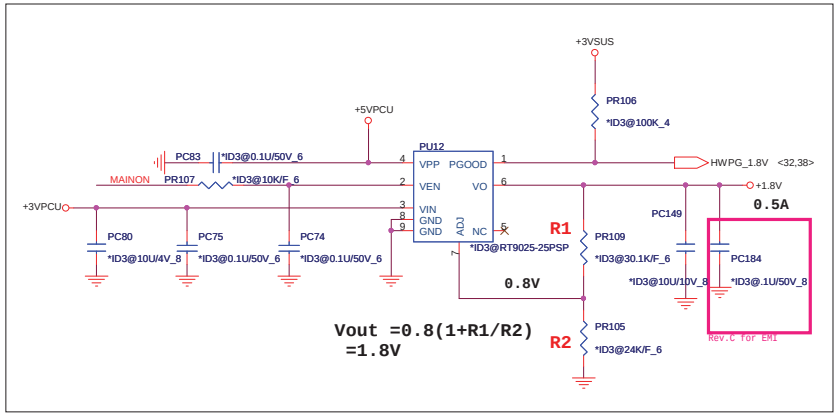

DDR3 -- NC

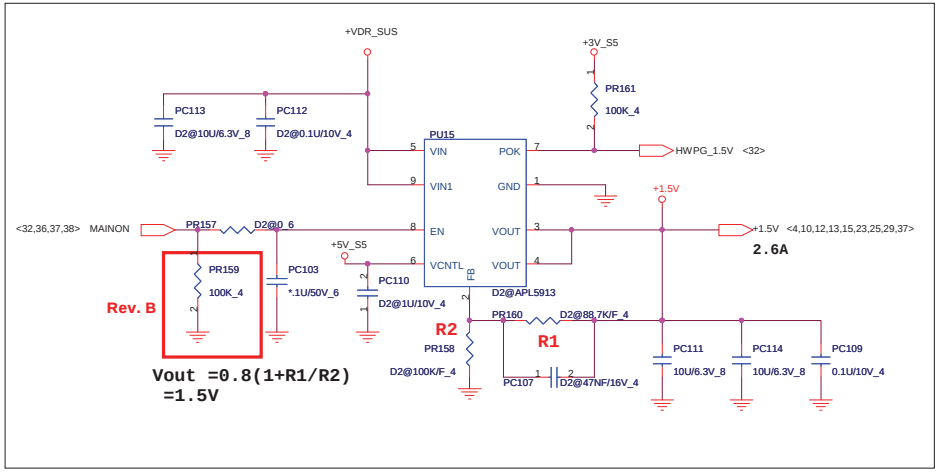

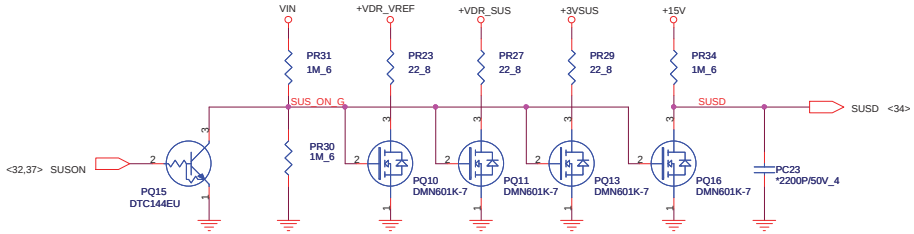

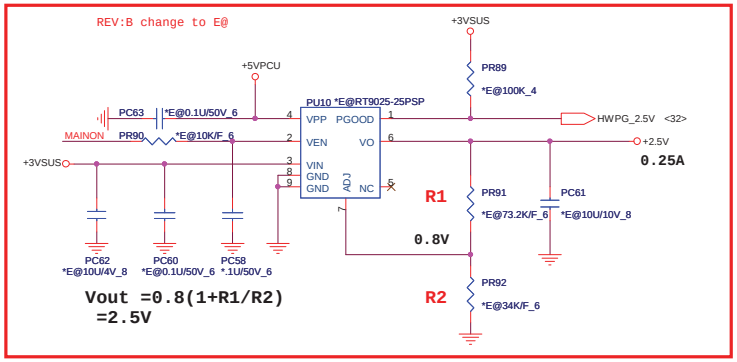

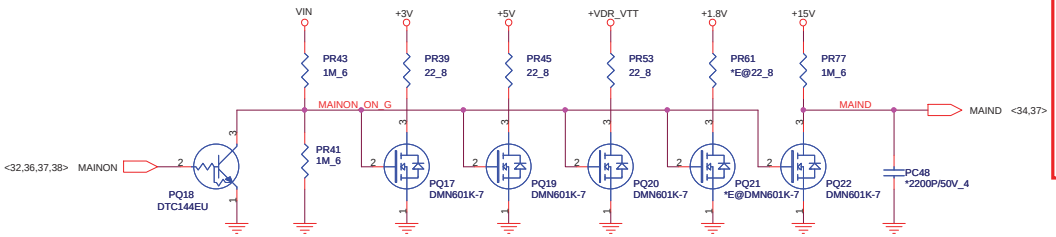

REV:B change to E@

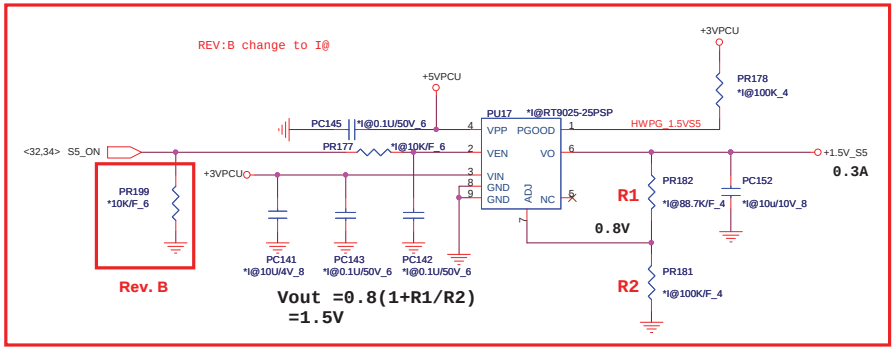

Quanta Computer Inc.

PROJECT : ZY2 / ZY6

Size	Document Number	Rev
	Discharge (2.5V/1.5V)	1A

Date: Tuesday, August 12, 2008 Sheet 39 of 40

http://hobi-elektronika.net

PDF created with FinePrint pdfFactory Pro trial version http://www.fineprint.com

Power Tree Table

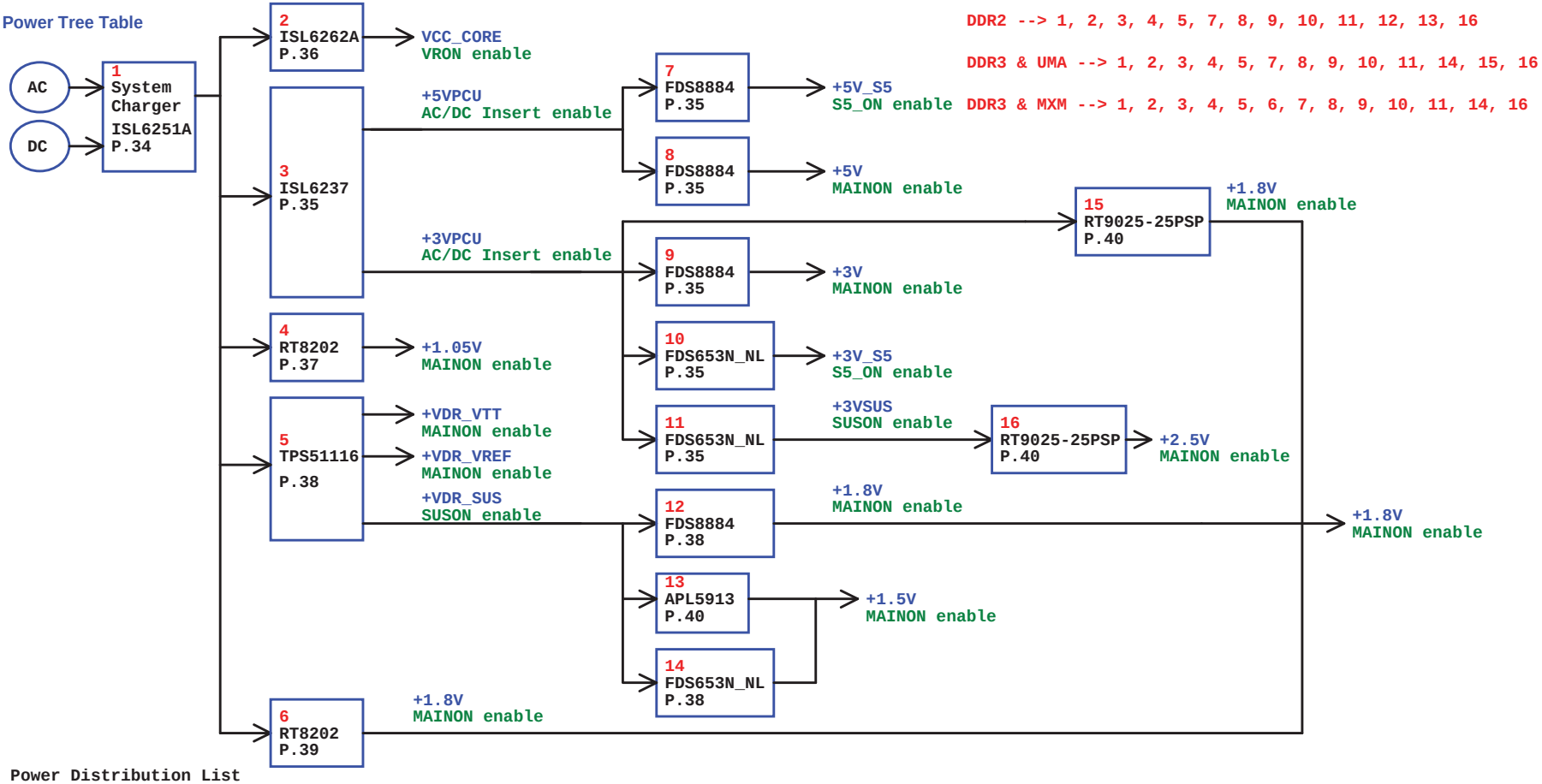

Power Distribution List

Power	Distribution
VCC_CORE	CPU
+5VPCU	ICH8M, RJ45/USB /B, USB/eSATA, Satellite LED, CIR
+3VPCU	RTC, HALL SENSOR, KB, TP/FP/LED /B, Power /B, Kill SW, EC, ID, SPI Flash, CIR
+1.5V	CPU, GMCH, ICH9M, Mini Card, New Card
+VDR_SUS	GMCH, DDR
+VDR_VREF	GMCH, DDR
+VDR_VTT	DDR
+1.05V	CPU, CLK, Thermal Trip, GMCH, ICH8M
+5V_S5	ICH8M, G-SENSOR, Felica, USB/eSATA
+5V	CPU, ICH8M, VGA, Camera, CRT, HDMI, SATA HDD, PATA ODD, PCMCIA, TP/FP/LED /B, EC, Speaker, Headphone
+3V	CLK, CPU Thermal Monitor, FAN, GMCH, DDR, ICH8M, VGA, LCD/LED Panel, HALL SENSOR, CRT, HDMI, SATA HDD, PATA ODD, PCMCIA, Cardreader (OZ129T) Mini Card, KB, TP/FP/LED /B, RJ45/USB /B, Bluetooth, MMB, New Card, PC BEEP, EC, Codec (CX20561), VR, Headphone, MDC
+3V_S5	ICH8M, Mini Card, RJ45/USB /B, New Card
+3VSUS	ICH8M, FP
+1.8V	Cardreader
+2.5V	MXM

http://hobi-elektronika.net

Quanta Computer Inc.
PROJECT : ZY6D

Size	Document Number	Rev
	Power Tree Table	1A

Date: Thursday, August 28, 2008 Sheet 40 of 40

PDF created with FinePrint pdfFactory Pro trial version http://www.fineprint.com

CHANGE LIST

Model	REV		MODEL ZY2 FROM	To
ZY2 MB	1A	FIRST RELEASED: E200610-3793 (PCB:)	X	1A
	1B	Page2 : Add R475 ,531 & R532 to avoid active error. (follow CK505 design guideline)	X	1A
		Page2 : Swap SRC4 & SRC9, because NEW_CLKREQ# is only to control SRC1 or 4	1A	2A
		Page3 : Add R540 to avoid active error. (CPU Thermal monitor)	1A	2A
		Page6 : Follow DDR3 spec R251 change to 10K.	1A	2A
		Page18 : POP C282 &C284 and RSVD. C604 for DDR3 PCB boot issue.	1A	2A
		Page18 : HDA_RST# PIN change from 151 to 134 for customer request.	1A	2A
		Page18 : Swap Net:TX0 &TX2 (RN15 & RN17) For HDMI no function issue.	1A	2A
		Page20 : Add R527 ,R528 ,R529 ,R530 ,R539 ,R148 ,R153 ,R152 ,R104 & R105 for vendor request.(HDMI level shifter)	1A	2A
		Page20 : Change HDMI SW IC (U9) & schematic	1A	2A
		Page23 : Add R536 ,R542 ,R538 ,RP57 ,R537 customer request.(MINI PCI-E card function)	1A	2A
		Page25 : Add Intel Low Power ECR Solution(Audio)	1A	2A
		Page28 : Add part for D3 Enhanced (D3E).(cerd reader)	1A	2A
		Page29 : Add Keyboard LED function for customer request.	1A	2A
		Page30 : Location :C25 & C23 change to 100U & POP it for customer request.(USB)	1A	2A
		Page31 : Add D43 for customer request(FOR Dock :CRT _SENSE#)	1A	2A
		Page31 : CN12 & CN14 change footprint.(K/B & T/P CONN.)	1A	2A
		Page31 : Add C609 ,C606 & C608.(FOR DOCK : +5V & +5V_S5)	1A	2A
	2A	Page19 : change U22 LVDS PWR SW IC to TI for display isuue	1A	2A
		Page21 : remove 5787 schematic	1A	2A
		Page23 : Add C605 ,C70 ,C150 ,C613 &C614 for EMI request	1A	2A
		Page23 : Change CN27 CONN. & schematic for intel WL burnout issue	1A	2A
		Page25 : Change U13 packing from TQFN to TDFN for vendor request	1A	2A
	2B	Page20 : Add R566 ,R567 ,R568 ,R569 ,C612 ,C616 ,C617 ,C618 solve the HDMI EMI issue.	1A	2A
		Page26 : Change CN41 PIN 7 & 8 from ADOGND to NC solve the ESD issue.	1A	2A
		Change CN42 PIN 7 & 8 from ADOGND to NC solve the ESD issue.	1A	2A
		Page30 : Add D47 ,D48, D49 & D50 solve the USB ESD issue.	2A	2B
		Page31 : Add R574 & R575 (390)solve Docking audio noise issue.	2A	2B
		Page32 : Add EMI resistor (R565) in SPI flash interface.	2A	2B
			2A	2B
			2A	2B
			2A	2B
			2A	2B
			2A	2B
			2B	3A
			2B	3A
			2B	3A
			2B	3A
			2B	3A
			2B	3A
			2B	3A

PROJECT : ZY2
Quanta Computer Inc.

Size	Document Number	Rev
	Change list	1A

Date: Tuesday, August 12, 2008 Sheet 41 of 41

DOC NO.	PROJECT MODEL :	ZY2	APPROVED BY:		DATE:	2007/ 2/15
	PART NUMBER:		DRAWING BY:		REVISON:	3A

http://hobi-elektronika.net

PDF created with FinePrint pdfFactory Pro trial version http://www.fineprint.com